Razor Sharp Tools in Just Minutes

Choosing & Using **Drawer Slides**

7 Top Tips for Routing Perfect Edges

Woodsmith®

Woodsmith.com

Vol. 33 / No. 193

INSIDE:

Simple Tool for Perfect Bevel & Miter Cuts

A Workbench Helper that You'll Use All the Time

Gluing Up an Edge-Grain Panel — Shop Secrets Revealed

MOBILE KITCHEN WORKSTATION

- Wide, Butcher Block Top
- Plenty of On-Board Storage
- Rolls Wherever You Need It

A Publication of August Home Publishing

looking inside

Table of Contents

from our readers
Tips & Techniques 4

all about
Metal Drawer Slides 8
Learn why metal slides provide a handy, versatile option for installing drawers.

tools of the trade
Bench Grippers 10
You're guaranteed to find a load of uses for these new benchtop accessories.

jigs and fixtures
Digital Angle Gauges 12
These easy-to-use, inexpensive gadgets make precise tool setups a snap.

techniques from our shop
Perfect Edge Profiles 14
Here are the tips and techniques you need to rout crisp edge profiles at the router table.

tips from our shop
Shop Notebook 30

woodworking technique
Edge-Grain Top 40
Take an in-depth, step-by-step look at assembling this woodworking standard.

working with tools
Diamond Plate Sharpening 44
You'd be hard pressed to find a faster sharpening method. We'll tell you why.

finishing room
Spraying Water-Based Finish 46
The combination of water-based finish and an HVLP spray system is hard to beat.

details of craftsmanship
Woodsmith GO ONLINE EXTRAS
Table Top Edges 48
We'll show you how to complement a design by choosing the right edge profile.

in the mailbox
Q & A 50

hardware and supplies
Sources 51

Cottage-Style Cabinet page 16

Craft Center page 22

projects

weekend project

Cottage-Style Storage Cabinet . . 16

Bathroom storage has never looked better — or been more practical. But the best thing about this project is that straightforward construction gets the job done in a flash.

designer series project DESIGNER'S NOTEBOOK

Craft Center 22

The expansive worksurface and abundant storage make this project a gift from crafter's heaven. However, you'll find that all the woodworking is very down to earth.

heirloom project DESIGNER'S NOTEBOOK

Kitchen Workstation 32

Which is the top draw — the versatility that will turn this project into the hub of activity in your kitchen, or the handsome appearance that will make it the center of attention?

Woodsmith GO ONLINE EXTRAS

Kitchen Workstation page 32

editor's note

Sawdust

Storage. No matter how much you have, it never seems like enough. That's why we decided to devote the three projects in this issue to overcoming storage challenges. Each one is designed to address storage problems in a different room of the house.

Kitchens and bathrooms are notorious for being short on storage. So that's where we started. For the kitchen, we designed a roll-around work cart. In addition to an ample worksurface, it provides plenty of on-board storage in the three drawers and an open storage bay for cookware or kitchen appliances. As an option, you can add a combination wine rack and shelf unit. And if you take a look at the photo on the cover, you'll see that this project is as attractive as it is functional.

Moving on to the bathroom, we're featuring a small storage cabinet. Its compact footprint allows it to fit in just about any bathroom. But inside there's plenty of room for towels, bathroom tissue, soap, or any of the dozens of items that always seem to accumulate in the bathroom.

The last project in this issue is one that can be used in a number of locations. It's a craft center that serves as a place to work on your craft projects and doubles as a multi-purpose storage unit as well. Individual "cubbies" provide room for books, supplies, and anything else you wish to store. Doors and drawers help to organize and conceal your items.

If you don't have a need for the large worksurface that the craft center offers, you can build the two end units alone and stack them to use as a combination bookcase and storage cabinet. It's a versatile project that can be used in a living room, basement, den, or craft room.

Terry

Woodsmith GO ONLINE EXTRAS

This symbol lets you know there's more information online at Woodsmith.com. There you'll see step-by-step videos, technique and project animation, bonus cutting diagrams, and a lot more.

Tips & Techniques

Miter Saw Dust Collection

My miter saw sees a lot of use. Consequently the amount of sawdust it creates is overwhelming and it goes everywhere. To help get some control over this problem, I built the sliding dust port you see in the photo above.

The key component in this system is the large dust port. It's mounted to a plywood frame that slides in grooves in the surrounding frame's rails. This way, you can move the port to catch the sawdust when mitering.

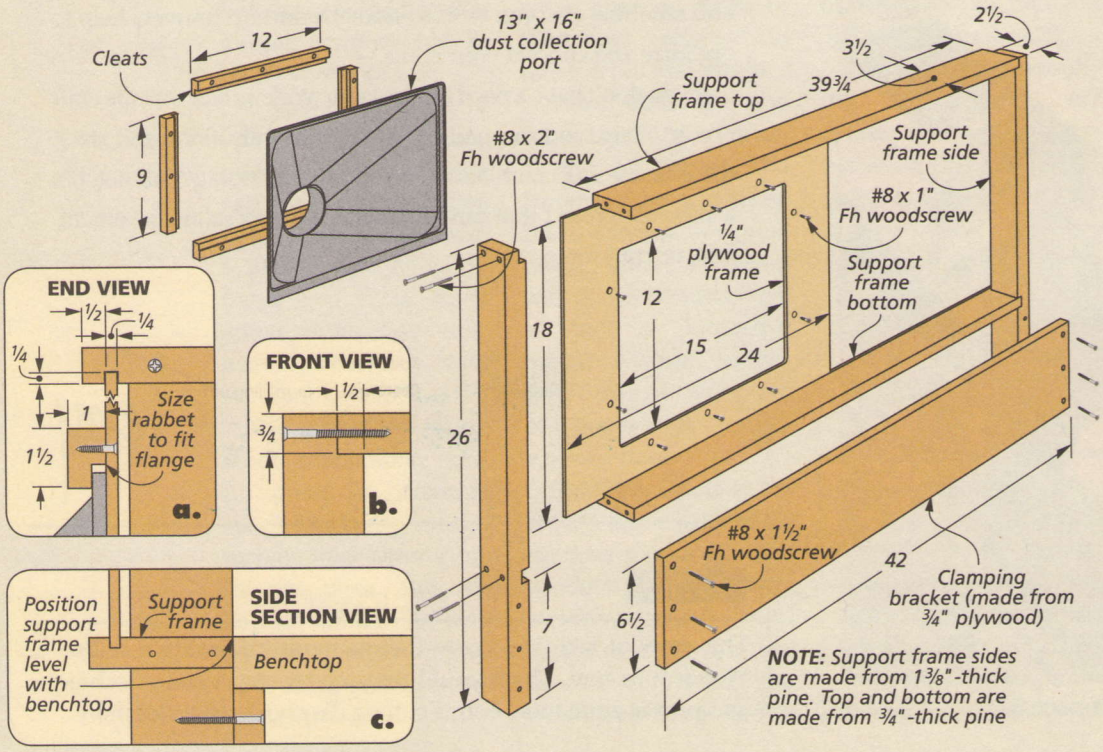

The drawings show how it's all put together. The assembly is designed to bolt or clamp to the back of the miter saw station. It can be modified to suit your particular setup.

I started the construction by making the outside support frame. Grooves in the top and bottom pieces house a plywood dust port frame, as shown in details 'a' and 'c.' After assembling the frame, you can make the plywood frame to fit the dust port.

With the frame assembled, you can attach the large dust port to the plywood using a set of rabbeted cleats (main drawing and detail 'a'). Now you can fasten the assembly to the station and get to work.

Tim Kelley
Newport News, Virginia

Point Storage

I could never find a good place to store my painter's points so they ended up scattered on the workbench. The little hook you see in the photo above solves the problem and is easy to make.

Bend a 1"-wide piece of aluminum bar to form a short hook. Drill a small hang hole at the other end. Just slip the bar through a hole in the side of each point to stack and store them (photo at right).

Ted Baca
Greeley, Colorado

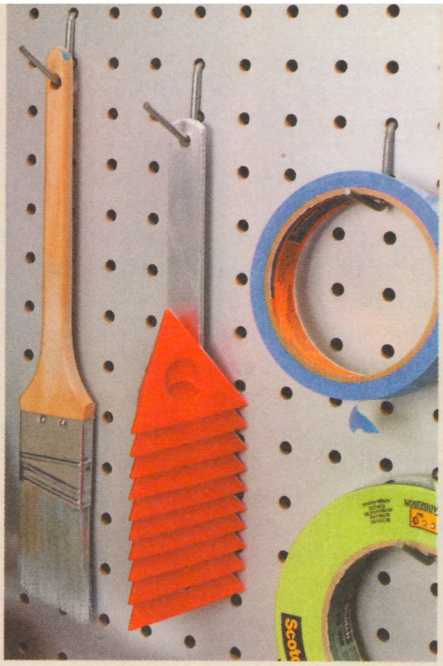

Sled Stop

A crosscut sled on the table saw makes accurate crosscuts a breeze. But one of the downsides is steering clear of the blade as it exits the back of the sled. Instead of building an elaborate blade guard, I use a much simpler solution — a stop block.

As you can see below, I clamp a wood block along the back edge of the table saw. It's positioned to keep the bulk of the blade from exiting the back of the sled at the completion of the cut. A simple and safe solution.

Bill Wells
Olympia, Washington

SUBMIT YOUR TIPS ONLINE

If you have an original shop tip, we would like to hear from you and consider publishing your tip in one or more of our publications. Go to:

Woodsmith.com
Click on the link,
"SUBMIT A TIP"

You'll be able to tell us all about your tip and upload your photos and drawings. You can also mail your tips to *"Woodsmith Tips"* at the editorial address shown at right. We will pay up to $200 if we publish your tip.

FREE TIPS BY EMAIL

Now you can have the best, time-saving secrets, solutions, and techniques sent directly to your email inbox. Just go to **Woodsmith.com** and click on ***"Sign Up for Free E-Tips."*** You'll receive one of our favorite tips each week.

Woodsmith

No. 193 February/March 2011

PUBLISHER Donald B. Peschke

EDITOR Terry J. Strohman
MANAGING EDITOR Vincent Ancona
SENIOR EDITOR Ted Raife
ASSOCIATE EDITOR Dennis Perkins
ASSISTANT EDITOR Carol Beronich
CONTRIBUTING EDITORS Bryan Nelson, Phil Huber, Randall A. Maxey, James Bruton

EXECUTIVE ART DIRECTOR Todd Lambirth
SENIOR ILLUSTRATORS David Kreyling, Harlan V. Clark, Peter J. Larson, David Kallemyn
SENIOR GRAPHIC DESIGNER Bob Zimmerman
GRAPHIC DESIGNER Shelley Cronin
GRAPHIC DESIGN INTERN Megan Leafgreen
CONTRIBUTING ILLUSTRATORS Dirk Ver Steeg, Peter J. Larson, David Kallemyn, Erich Lage

CREATIVE DIRECTOR Ted Kralicek
SENIOR PROJECT DESIGNERS Ken Munkel, Kent Welsh, Chris Fitch, Jim Downing
PROJECT DESIGNER/BUILDER John Doyle
SHOP CRAFTSMEN Steve Curtis, Steve Johnson
SENIOR PHOTOGRAPHERS Crayola England, Dennis Kennedy
ASSOCIATE STYLE DIRECTOR Rebecca Cunningham
SENIOR ELECTRONIC IMAGE SPECIALIST Allan Ruhnke
PRODUCTION ASSISTANT Minniette Johnson
VIDEO EDITOR/DIRECTOR Mark Hayes, Nate Gruca

Woodsmith® (ISSN 0164-4114) is published bimonthly by August Home Publishing Company, 2200 Grand Ave, Des Moines, IA 50312.

Woodsmith® is a registered trademark of August Home Publishing.
Copyright© 2011 August Home Publishing Company. All rights reserved.

Subscriptions: Single copy: $4.95.
Canadian Subscriptions: Canada Post Agreement No. 40038201. Send change of address information to PO Box 881, Station Main, Markham, ON L3P 8M6.
Canada BN 84597 5473 RT
Periodicals Postage Paid at Des Moines, IA and at additional offices.
Postmaster: Send change of address to *Woodsmith*, Box 37106, Boone, IA 50037-0106.

WoodsmithCustomerService.com

ONLINE SUBSCRIBER SERVICES
- **VIEW** your account information
- **RENEW** your subscription
- **CHECK** on a subscription payment
- **PAY** your bill
- **CHANGE** your mailing or e-mail address
- **VIEW/RENEW** your gift subscriptions
- **TELL US** if you've missed an issue

CUSTOMER SERVICE Phone: 800-333-5075

SUBSCRIPTIONS
Customer Service
P.O. Box 842
Des Moines, IA 50304-9961
subscriptions@augusthome.com

EDITORIAL
Woodsmith Magazine
2200 Grand Avenue
Des Moines, IA 50312
woodsmith@woodsmith.com

AUGUST HOME PUBLISHING COMPANY

Printed in U.S.A.

Tool Handles

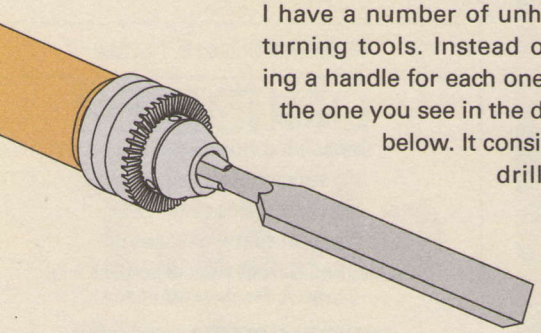

I have a number of unhandled turning tools. Instead of making a handle for each one, I built the one you see in the drawing below. It consists of a drill chuck mounted on the end of a wood dowel with a threaded rod. The great thing is, this handle is useful for other shop tasks, as well.

It starts with a length of hardwood dowel. Then you need to find a length of threaded rod that fits the threads in your drill chuck. I used epoxy to secure the rod into a deep hold drilled in the end of the dowel. A nylon washer helps keep the chuck secure yet easy to remove if needed.

To use the handle, you can simply insert the tool in the chuck and tighten it. It not only works for lathe tools but for drill bits and countersink bits, too. And you can use a smaller chuck to make a pin vise for holding small objects.

Ken Kennedy
Santa Maria, California

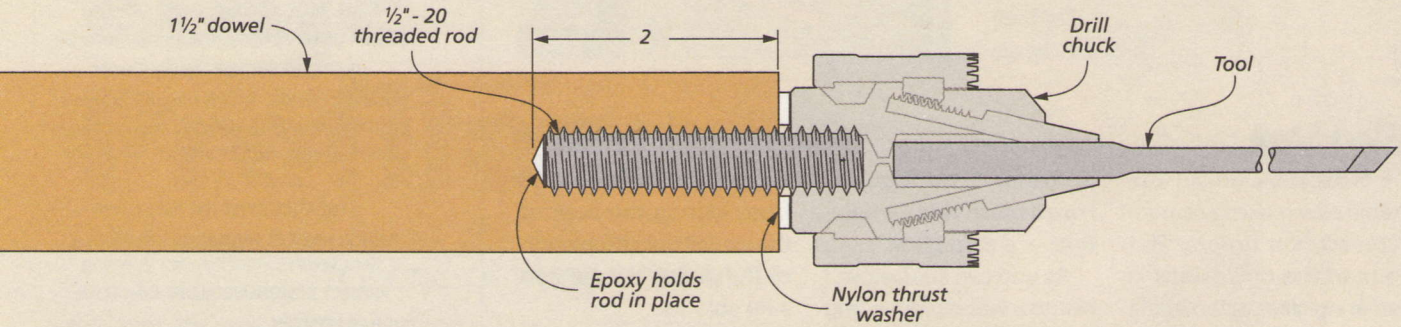

Joint Thin Strips

Sometimes it's necessary to joint the the edge of a thin strip to remove saw marks or shave off some width. But this can be a challenge on the jointer. So I made the jig you see in the photo at left. This jig not only protects my hands, but keeps the workpiece square to the fence, too.

To make the jig, I cut a groove in the edge of a "carrier" board. The groove should be sized to hold the thin strip firmly in the jig. Then I attached a cleat on the back of the board. This keeps the thin strip in place as you run it across the jointer.

To use the jig, keep the face of the carrier board flat to the fence while jointing the thin strip.

Rick Melpignano
Bellingham, Massachusetts

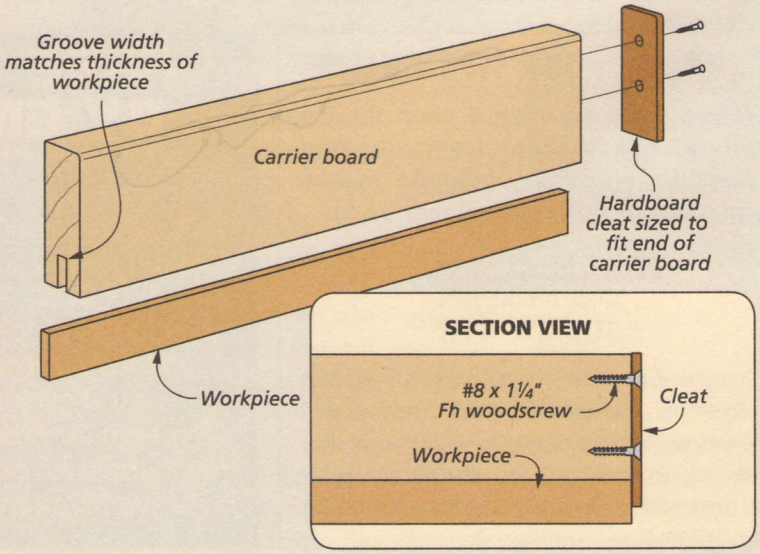

Sand on a Scroll Saw

I use my scroll saw for sanding the edges of small pieces. Although sanding strips designed for scroll saws can be purchased, they tend to be expensive. Instead, I make my own. They're easy to make.

Start by bending two 8d finish nails or pieces of 10-gauge wire into open hooks. Next, create a loop on each end of a strip of cloth-backed sandpaper by folding the ends over. Fasten the loose ends with hot-melt glue.

Making your own sanding strips has a few advantages. Like I mentioned, they're easy and inexpensive to make. The strip can be made either single or double-sided. Plus, you can use any grit sandpaper and make the strip in custom widths to suit the task at hand. Just use light tension when installing it on the saw.

Ed Schumann
Poughkeepsie, New York

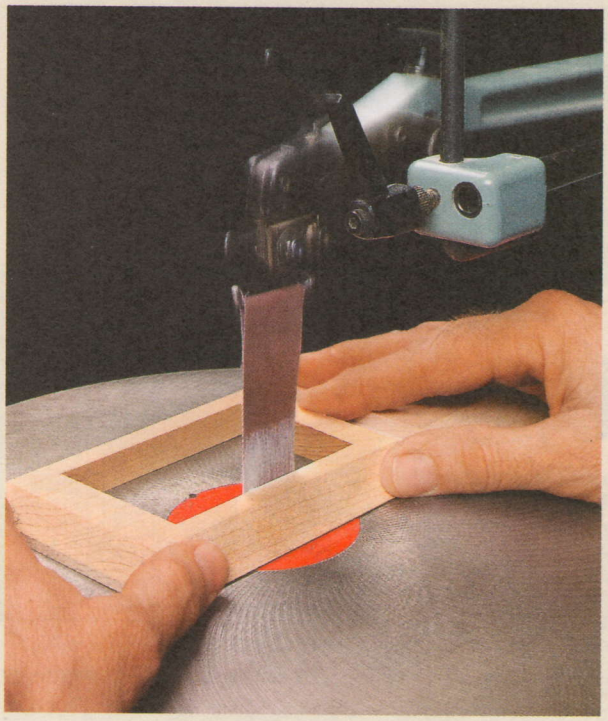

WIN THIS BOSCH *IMPACTOR*

That's right, send us your favorite shop tips. If your tip or technique is selected as the featured reader's tip, you'll win a *Bosch* impact driver just like the one shown here. To submit your tip or technique, just go online to *woodsmith.com* and click on the link, "SUBMIT A TIP." You can submit your tip and upload your photos for consideration.

The Winner!

Congratulations to Tim Kelley, winner of the *Bosch Impactor* driver. To find out how you could win a *Bosch* driver, check out the information on the left.

Quick Tips

PREFINISH PLYWOOD

When I'm using plywood to build a project I always apply a couple coats of finish to the uncut panel before I cut it into pieces. There are a number of reasons why this makes it easier to work with.

The best thing is I don't have to worry about getting finish into tight corners of the finished project. Another benefit is the finish seals the veneer so there's less tear out when I cut it. And there's less hassle during glue-ups. The finish allows any glue squeezeout to just wipe right off for clean joint lines.

I apply the finish with the plywood flat on a worksurface. This way, I don't have to worry about drips and runs.

John Bailie
Houston, Texas

EASY GLUE DISPENSING

I buy the large bottles of wood glue to save some money in the shop. But pouring glue from the large bottles to the smaller dispensers is difficult and messy.

I found the solution at a local restaurant supply store. I bought a plastic pump like the kind you see on the large ketchup bottles in restaurants. Now I just pump the glue into the smaller bottle without any drips or mess.

Chris Riley
Thunder Bay, Ontario

RUST PROOFING

Keeping tools rust-free can be a challenge, but I use a trick my grandfather taught me.

I keep a block of refined camphor in each of my tool boxes to keep the rust away. You can find these blocks on the internet at *Amazon.com.* Be sure to look for pure or refined camphor. Camphor gum is not as reliable.

Kevin Ruud
Las Vegas, Nevada

metal Drawer Slides

These modern marvels take the hassle out of installing drawers.

Fitting drawers to a case in the traditional "wood-to-wood" way has always been a challenge. And even when a drawer is fit perfectly, there's no guarantee that it will operate smoothly over the long term. The combination of wood movement and wear can easily undo a lot of careful work.

The introduction of metal drawer slides changed things. Drawer slides make fitting and installing drawers easier, they'll open and close with less effort, and slides offer long-term reliability. For many heavy-duty, high-use, or general utility applications, they're a real blessing.

MANY CHOICES. Today there are many types of slides available that are each designed to meet different needs. The trick is choosing the right one for a particular project. This really isn't all that difficult. For use in furniture, you can generally narrow the decision to a choice between several basic styles. Then it's just a matter of deciding on a few specifics.

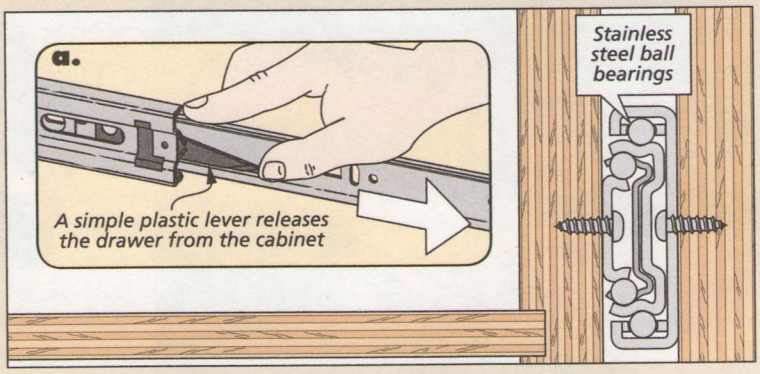

THE BASICS. In our shop, we always choose ball-bearing type slides for our projects, as shown above. This type offers an effortless slide and is very durable.

The slide consists of two or three nesting sections. The single section is always attached to the drawer while the remaining assembly is attached to the case (see the box on the opposite page). The sections nest together compactly when the drawer is closed and then telescope out when the drawer is opened. The drawer and case parts can be separated for

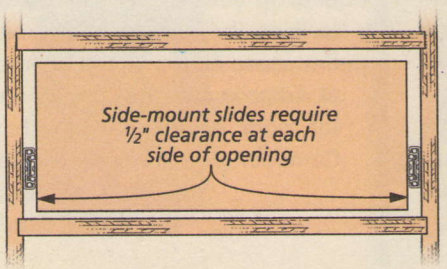

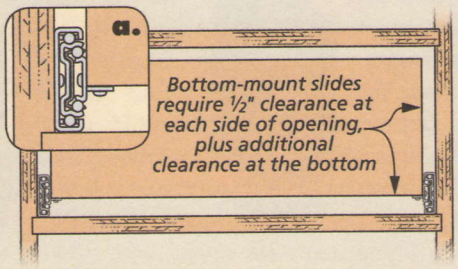

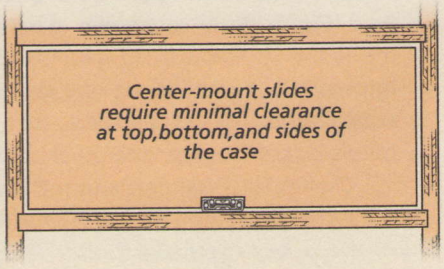

installation of the slide or removal of the drawer (upper detail drawings, opposite page).

MOUNTING STYLES. A major distinction in slide types is how and where the slides mount to the drawer and case. The drawings across the bottom of the opposite page illustrate the differences.

Side mount slides are the most commonly used type. The drawer part of the slide is mounted to the drawer side, usually near the mid point or lower. This type of slide requires a standard ½" clearance between the drawer and case at each side. So you sacrifice 1" of usable space. This dimensioning has to be taken into account when building the drawer.

Bottom-mount slides are similar to side-mount slides with one difference. Mounting tabs are incorporated into the drawer part of the slide that allow you to fasten it to the bottom edge of the drawer side. The advantage is that positioning this part is easier and the mount is more solid. However, this arrangement requires approximately an extra ⅝" top-to-bottom clearance in addition to the ½" required at each side.

A center-mount slide is installed beneath the drawer. (Only one slide is used). The drawer part is fastened to the drawer bottom or a cleat, while the case section is mounted at the center of the drawer opening. The benefit is that the slide is hidden and only minimal side clearance and top-to-bottom clearance is needed. A drawback is that they don't provide near the support of two slides mounted to the sides of the drawer. They're recommended only for light-duty applications.

LOAD CAPACITY. This leads us to the next subject. All metal slides carry a load rating. This is the combined weight (the drawer and its contents) the slides can handle when the drawer is opened.

Good quality side-mount slides start at a rating of 75 lbs. Slides with ratings of 100 lbs., 200 lbs., and up are available. However, a 75 to 100 lb. rating is more than adequate for most furniture and cabinetry. As I mentioned, center-mount slides have a significantly lower load rating — 25 to 35 lbs.

ACCESS. Another feature that you'll want to consider is the amount of drawer extension the slides allow. The range is shown in the photo above.

On the low end of the cost scale you have ¾-extension slides. This type allows the drawer to be pulled out of the case about ¾ of its depth. So access to the back of the drawer may be inconvenient. (Note that center-mount slides are only available in ¾-extension.)

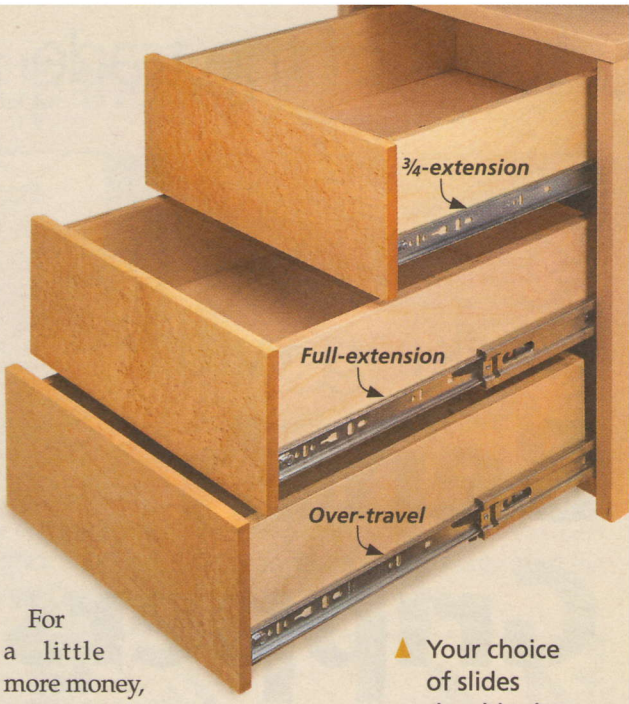

▲ Your choice of slides should take into account the degree of drawer access needed.

For a little more money, you can purchase full-extension slides. These slides will open to the full designated length of the slide. For example, an 18"-long slide will extend 18".

In some instances, an even greater degree of extension is welcomed — such as when a drawer is beneath an overhanging top. Here, you may want to use over-travel slides. This type is designed to extend about 1" beyond the overall length of the slide.

You probably won't want to use metal slides on every drawer project. But it's nice knowing that when you do decide to use them, there's almost certainly a slide that will meet the need. W

Easy Installation: Drawer Slide Mounting Aids

Metal slides work great on cabinets with face frames — with one minor catch. When installing the case part of the slide, you need a way to bridge the offset between the face frame and the case side. Wood spacers are one option. But slide manufacturers offer some handy, ready-made solutions that are worth a look.

The photos at right show inexpensive, easy-to-install plastic spacers that can be used to fill the gap. Once positioned in the case, the slide is screwed to the spacer.

The photo at left shows another strategy — an adjustable bracket that fits over the end of the slide and mounts to the back of the case.

▼ This mounting bracket fastens to the case back.

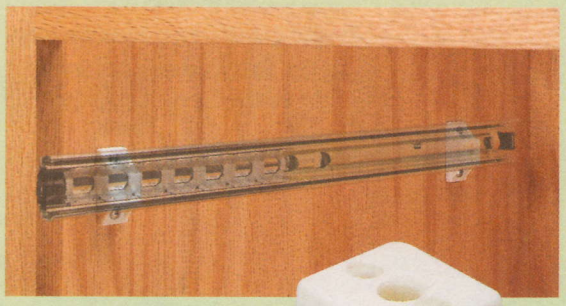

These handy ► mounting spacers come in a variety of thicknesses.

working with Bench Grippers

Find out how these handy accessories make everyday shop tasks go a little more smoothly.

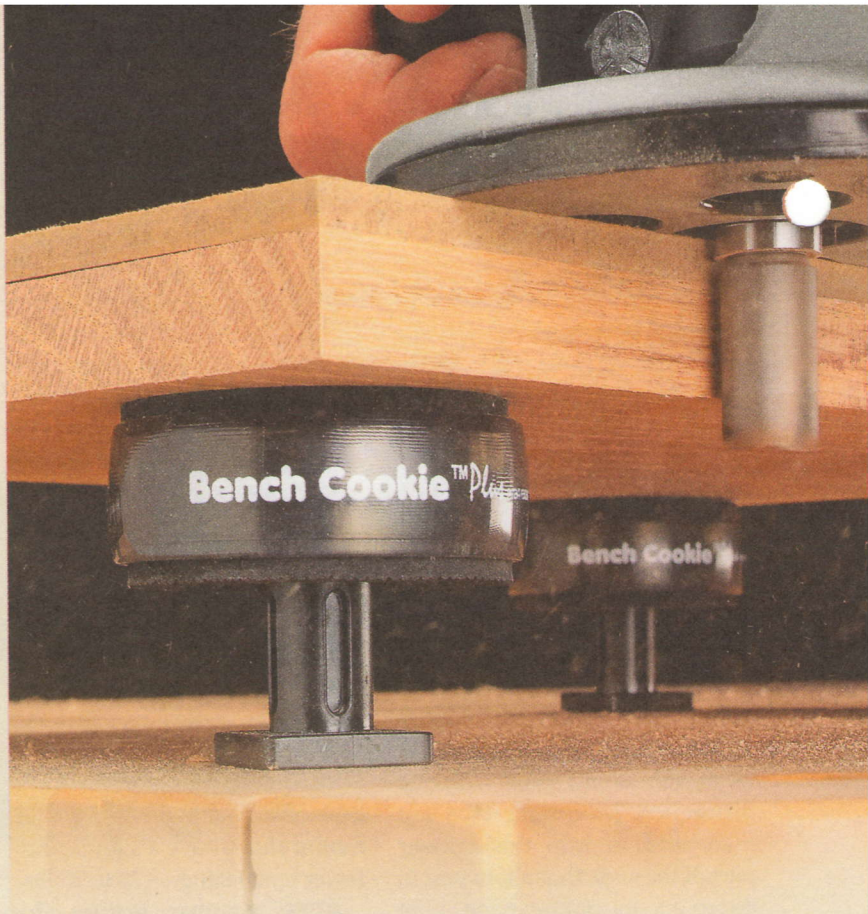

When using a router or orbital sander on a flat workpiece at the bench, I've always relied on a router mat. It cushions the workpiece and keeps it from sliding around on my bench.

Within the last few years, though, there's been a new challenger to the trusty router mat — bench grippers. These rubber-padded blocks serve the same purpose as a router mat, but with some important additional features and benefits.

SHOP BENEFITS

Rockler gets the credit for developing the first commercial gripper — the *Bench Cookie*. These hockey puck-like disks are just round blocks of plastic with a layer of high-friction rubber on each side. (In fact, *Rockler* used actual hockey pucks in an early prototype.)

The textured rubber pads on each side of the disk tenaciously grip the workpiece and the worksurface to keep everything steady as you use your power tools. An added benefit is that they also elevate the workpiece to provide clearance when edge-routing.

BENCH COOKIES PLUS. *Rockler* followed up on the success of their original gripper design with the *Bench Cookie Plus*. The key difference is the addition of a threaded insert on one side of the gripper. This allows you to add a "riser" to elevate the cookie off your workbench (see main photo above).

The risers are available in two different heights and simply screw into the insert in the center of the gripper. They are sized to fit into ¾"-dia. dog holes, and the longer riser also features a molded stop, as shown in the photo below.

For some situations, the added height of the risers really comes in handy. For example, I use them during glue-ups when I need extra clearance to slip large bar clamps under an assembly.

MORE VARIETY. Imitation is the sincerest form of flattery. And since the *Bench Cookie's* introduction, a

couple of other companies have quickly followed suit with similar products. You can see the *Wolf Bench Paws* and *Loc-Blocks* at the bottom of the opposite page. Aside from their shape, these grippers perform the same basic function as the *Bench Cookies*. However, the *Loc-Blocks* can be fastened together to provide a wider gripping surface.

FINISHING HELPERS. Besides gripping and elevating a workpiece, these handy accessories can help you out with another shop task — applying a finish. *Rockler* recently introduced their *Bench Cookie Cones* shown in the left margin on the opposite page. The cone snaps in place over a *Bench Cookie*, providing the same function as the popular "painter's points." They allow air to circulate under the finished workpiece without marring the finish. This allows you to apply finish to all areas of the project. This means you don't have to wait for one side to dry before turning it over to finish the other side.

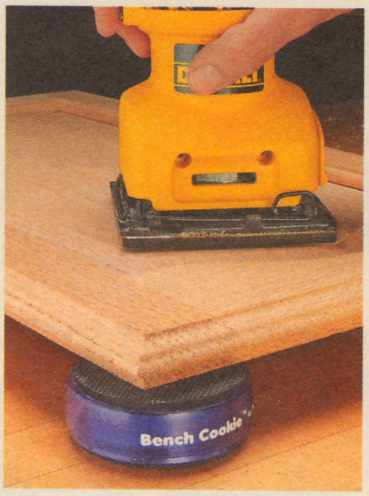

▲ Bench grippers hold assemblies steady even against the force of power tools.

The *Wolf Bench Paws* perform this small task, as well. As you can see in the photo below, short dowels (included) can be sharpened with a pencil sharpener to be used as painter's points. The dowels fit a hole molded into the face of the *Wolf Bench Paw*.

STORAGE. Any time I buy little accessories like these grippers, I'm stuck with figuring out where to store them. For the *Rockler Bench Cookies*, the solution is easy. *Rockler* makes an inexpensive rack designed especially for them. The rack is designed to sit on your benchtop or can be wall-mounted. I installed my rack on pegboard (photo above).

Wherever you store the grippers, you'll want to be able to grab them quickly for sanding or routing a workpiece. And in the middle of a glueup, you don't need to spend time looking for them.

MAINTENANCE. When you look at these grippers, you get the impression there's nothing much that can go wrong with them. They're made of durable plastic and rubber material that can put up with a lot of abuse. While that's true, sawdust can quickly make them lose their grip.

▲ Storing *Bench Cookies* is easy in this handy rack.

The solution is easy. Whenever I see the rubber material getting dusty and dirty and losing its effectiveness, I simply grab a damp rag and wipe them off. That's it. They'll be as good as new following this quick cleaning.

SHOP-MADE GRIPPERS. I'll admit that before all these commercial versions of grippers came along, I was making my own from scrap pieces of MDF and old router mats or shelf liner material. You can see how in the box below. If you've got some spare time, you can make a bunch to have on hand wherever you need them.

HANDY HELPERS. Whether you make your own or spend a few dollars on commercial grippers (Sources, page 51), you'll find yourself reaching for them often. They're so simple in concept yet you'll wonder how you ever got along without them. W

▲ Using bench grippers to elevate a project for finishing is just one way to use this accessory. *Woodworker's Supply* includes dowels with their *Wolf Bench Paws* to use as painter's points.

Shop Tip: Shop-Made

Making your own bench grippers in the shop only takes a few minutes. And it can save you a little money.

To make your own, you can cut small pieces from MDF. Then attach router matting to both sides with hot glue or rubber cement.

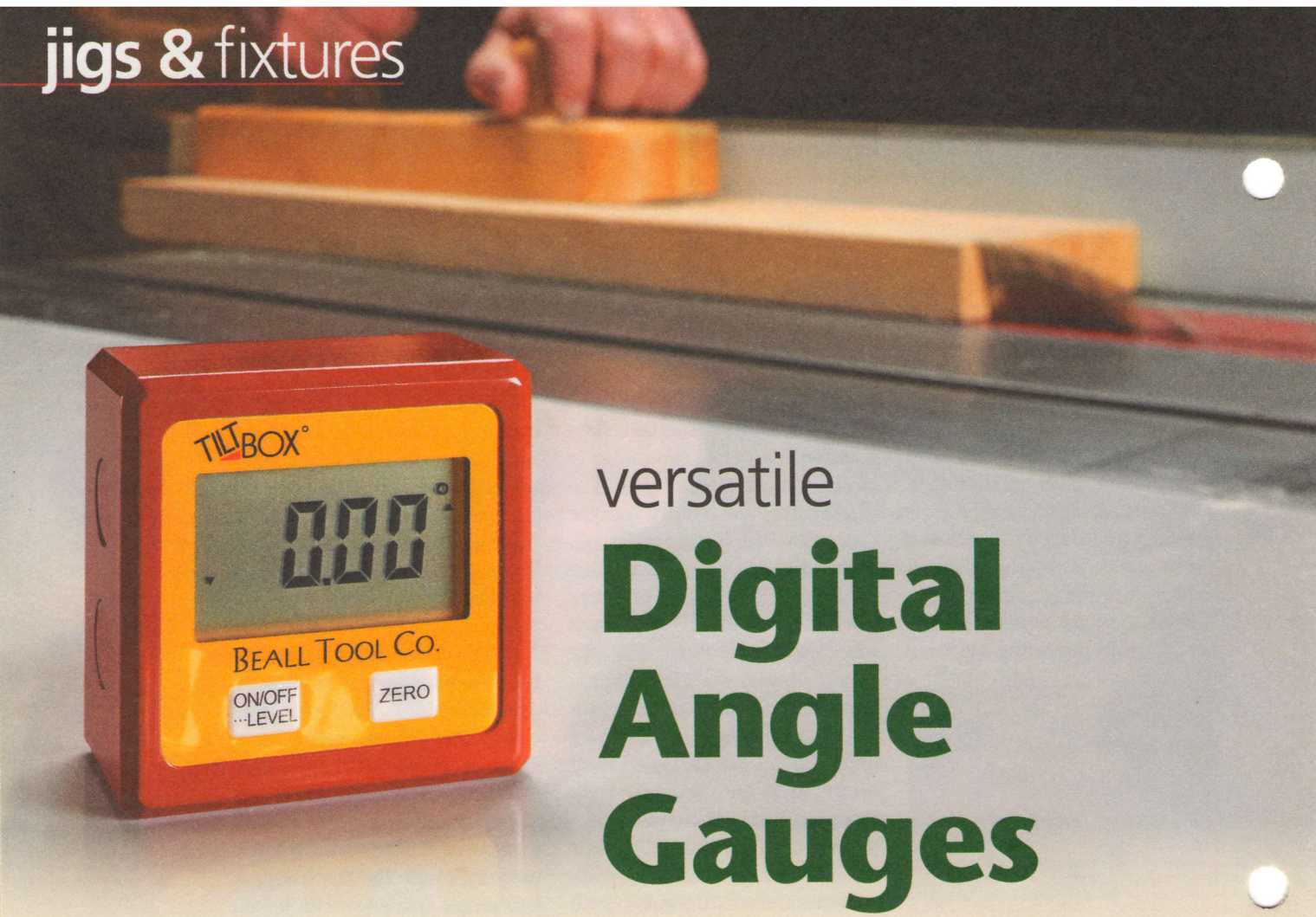

versatile Digital Angle Gauges

Stop leaning over your table saw and squinting in an effort to set the blade angle. Try one of these handy gauges instead.

For as long as man has been cutting wood, he's also struggled to find a reliable way to cut precise angles. Power tools made the cutting easier, but didn't really improve accuracy. The blade tilt scales on most table saws are notoriously inaccurate and hard to read. And while a protractor works well for layout work, it can be difficult to use when setting up tools.

Fortunately, there's a 21st century tool that should find a home in just about every workshop. A digital angle gauge can take the hassle out of setting up your saw for cutting any angle.

THE DIGITAL ADVANTAGE. I recently tried out three different models. The first was the *Wixey Digital Angle Gauge*. This one was first on the market. I also looked at the *Beall Tool Company's Tilt Box* and the *Angle Cube* from *iGaging*. You can find out where to get them all in Sources on page 51.

I found that digital angle gauges offer an inexpensive and accurate method of measuring any angle you'll use in the woodshop. By using one, you can quickly dial in the right setup angle for your saw every time. And that translates to perfectly cut project parts.

▲ Calibrate the device by setting it on the saw table and pressing the "zero" button.

▲ Magnets in the case allow you to attach it to the blade for an instant readout.

EASY TO USE. Best of all, using a digital angle gauge couldn't be easier. As you can see in the photos at the bottom of the opposite page, you start by placing it on the tool's flat surface (usually the table of your saw) and calibrate the display simply by pushing a button.

Then all you need to do is place the gauge on the blade (all the gauges have magnets to hold firmly at any angle) and crank in the angle you need. An LCD display gives you a readout while you move the blade.

HOW THEY WORK. The gauges rely on gravity for measuring the difference in two angles, so it doesn't matter if your saw is sitting on an uneven floor. But the gauge must be upright in use. You can't lay the gauges flat on their backs to set the angle for a miter gauge. For that, take a look at the digital protractor in the box below.

ACCURACY & RELIABILITY. I admit that before trying out these gauges, my primary concern was whether they're accurate enough to rely on in everyday use. All three passed the test with flying colors. Each gauge is accurate to within 0.1° (one-tenth of a degree). And that's plenty accurate for any woodworking task.

As a test, I set up my table saw to cut 45°, 30°, and 22.5° angles to make four, six, and eight-sided boxes. Every one came out with gap-free joints on the first try.

But the best testament to their accuracy is probably the fact that both of our shop craftsmen, Steve Curtis and Steve Johnson, keep an angle gauge by their table saws. They each have over thirty years of woodworking experience and neither of them is fond of "bells & whistles" gadgets. They both like the accuracy and ease of use.

Each of the gauges worked equally well. I liked the *Wixey's* display best. But on the downside, it uses a watch-style battery that runs out quickly. The *Tilt Box* and *Angle Cube* both take a longer-lasting 9-volt battery.

The gauges are all available for under $40. At that price, it's hard to resist picking one up. W

▲ Keeping the fence of your jointer square is a breeze with an angle gauge.

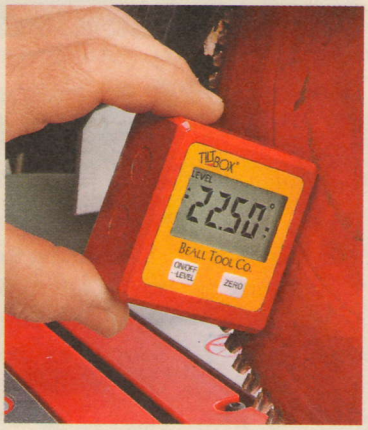

▲ Setting a miter saw blade for an accurate bevel cut has never been easier.

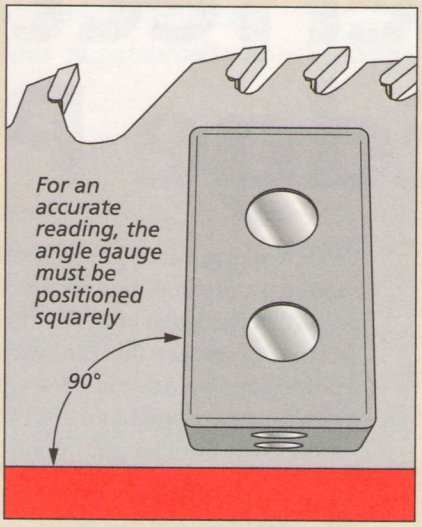

Worth a Look: Wixey Digital Protractor

▲ The long arms on the digital protractor make short work of setting any angle on your miter gauge or miter saw.

Once you get used to using an easy-to-read, digital setup tool at the table saw, you'll want the same reliability and convenience for other uses. When it comes to setting miter angles, or a drill press for example, a digital protractor is just the ticket.

Wixey built the same ease-of-use into the protractor as they introduced in the angle gauge. This device works in any position, however, making it perfect for setting up a miter saw or miter gauge.

You're not limited to tool setups either. You can take the protractor anywhere you need to measure an angle.

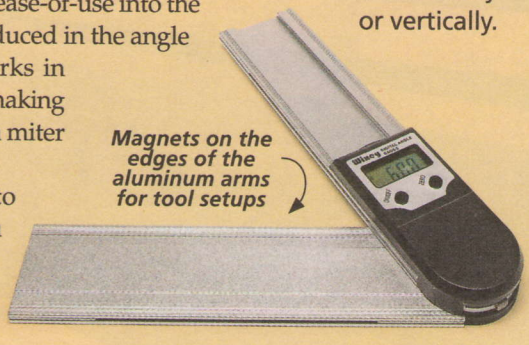

▼ The digital protractor can be used horizontally or vertically.

7 tips for Routing Perfect Edge Profiles

Woodworking can be pretty flexible. There's usually more than one tool and technique you can use to perform a particular task. But, there are some woodworking operations that can best be accomplished in a particular way. Adding a decorative edge profile to a glued-up panel falls into this category. Routing the profile is the number one option for this task.

Assuming the size of the panel allows it, I always rout edge profiles at the router table. The setup is easier and the large surface of the table provides good support for the panel. And although the operation may seem pretty foolproof, there are always a few tips and techniques that can be used to help produce a smooth, crisp, attractive profile.

1 Flatter is Better

The router table provides a large, stable bearing surface. But in order to realize the full benefit it offers, the table has to be smooth, flat, and "catch-free."

If the table isn't flat, you may have trouble routing a consistent, full-depth profile along an entire edge. A table with a very minor "hump" is workable, but it's difficult to get good results with a concave surface. The center of the panel will ride up as it passes over the bit and you may not be able to press it flat against the table. So make sure the table is flat.

If you use an insert in the table, it should be perfectly flush with the surrounding surface. This will eliminate the chance of the panel catching, bumping, or dipping as it passes over the edge of the insert, resulting in a "hiccup" in the profile. Then check for rough spots, protruding screws, or other irregularities that might mar the surface of the panel.

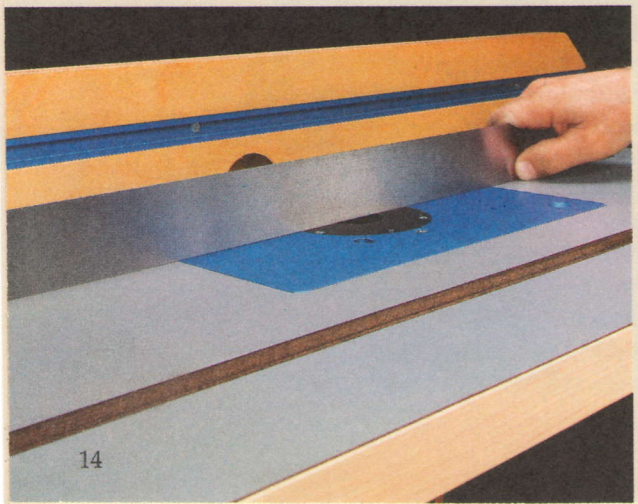

You'll get much better results when the table is flat and smooth.

2 Use the Fence

Most profile bits have a bearing on the top that will guide the cut along an edge. Although using the bearing for this purpose simplifies the setup, I prefer to use the router table fence to guide the panel across the bit.

A bearing-guided bit will follow any irregularities in the panel edge and you may not get a smooth, consistent profile. You'll also find that cuts made using only the bearing tend to produce a rougher, "chattery" surface.

The fence provides a long, stable guide surface that's completely independent of the spinning bit. Just make sure that both your fence and the edges of the panel are good and straight.

3 Multiple Passes

When routing all but the very smallest profiles, it works best to make multiple, light passes. Taking light cuts will minimize chipping, leave a much smoother surface, and it's easier on the bit and the router. The depth and number of passes is determined by the size and shape of the profile you're routing and the type of wood. However, always make the final pass a very light "skim" cut, removing only fine shavings.

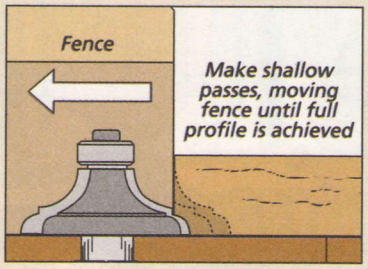

There are two techniques for taking multiple passes — you can raise the height of the bit between cuts, or move the fence back, exposing more of the bit. I prefer the latter approach.

For starters, it's easier to move the fence than to change the bit height. And once the bit height is set and tested, you're assured of an accurate depth-of-cut.

4 Correct Order

When routing across end grain, you'll always experience some degree of chipout as the bit exits the cut. So if you're going to rout a profile on all four edges of a panel, always start by routing across one end-grain edge. This way, the following long grain pass will rout away any problems.

If you plan to rout a profile on three edges of a panel (for example the bathroom cabinet on page 16), plan your first end cut so that you can next rotate the panel counterclockwise to rout the long edge. Follow this with the final end cut. To avoid chipout on the second end, use a backer board.

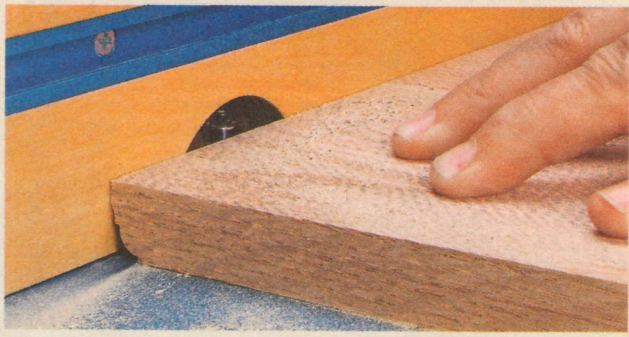

▲ Always make your first pass across one of the end-grain edges.

▲ A featherboard will help ensure the profile is cut to a consistent depth all around.

5 Consistent Depth

It can be a challenge to rout a profile to a consistent depth along all the edges. This is especially true at the corners. And adjoining profiles that don't match up can be particularly noticeable.

The cause is inconsistent downward pressure when feeding the panel across the bit. It's common to hold back on the force at both beginning and end of the cut. A simple solution is to take another pass applying firm pressure from end to end.

You can avoid this problem entirely by using a featherboard to help press the panel flat to the table, as shown at left.

6 Feed Rate

Finding the perfect feed rate is always tricky. If you move the panel too fast, you may get chipout or a rough cut — too slow and you'll burn the edge.

A natural inclination is to slow down as you approach the end of a cut. This is especially problematic on end grain. Your goal is to avoid chipout, but the unintended result is burning. The solution is to use the initial passes to find a feed that minimizes both problems. Then try to be consistent.

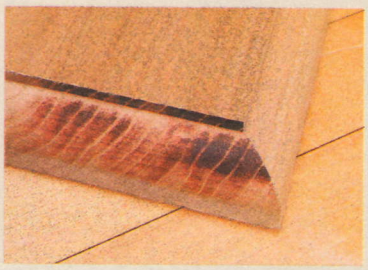

◀ A feed rate that's too slow leads to burning on the end grain.

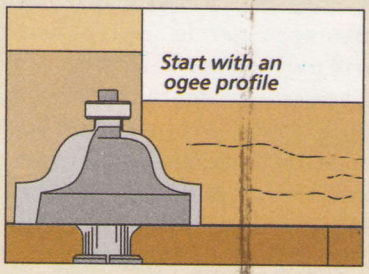

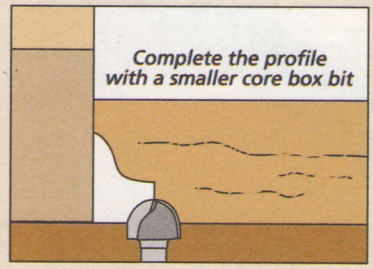

7 Complex Profiles

Some profiles require cuts made with two different bits. In this case, routing the larger or outer profile first establishes a "baseline" to guide you when routing the second profile. W

cottage-style Storage Cabinet

If your need is practical storage in a small package, this simple, eye-catching cabinet will fill the bill.

In many homes, convenient bathroom storage is always in short supply. The list of grooming necessities is long and most of these items need to be kept within easy reach, yet preferably out of sight. And of course, there's the issue of limited floor space.

Let me offer a solution — the compact, attractive cabinet you see at left. For starters, you'll find abundant hidden storage behind the two lower doors. In addition, it provides more accessible space in the upper compartment and on top. And all this comes with a very small footprint.

In addition to this practicality, it's easy to see that style hasn't been ignored. The frame and panel construction, bun feet, and simple molding profiles combine for a look that complements just about any decor. And a durable painted finish in your choice of color adds to the appeal.

For me, the clincher is that this project involves woodworking at its best. There's nothing tricky here — straightforward joinery and techniques make the work go quickly. You'll be in and out of the shop in two shakes.

There may be one catch. When the cabinet is done, you might not want to hide it in the bathroom. But there's nothing wrong with that.

CONSTRUCTION DETAILS

OVERALL DIMENSIONS: 12"D x 26"W x 38½"H

Edges of top and bottom eased with roundover

Sub-top and sub-bottom fastened to case sides with screws

Large roundovers on sub-panels add layer of detail at top and bottom of case

NOTE: Upper compartment provides convenient open storage

Back panel is plywood

Dadoes for divider cut after assembly of sides

No-mortise hinges simplify installation of doors

Magnetic catch and strike plate

¼" shelf pin

NOTE: Frame and panel construction enhances traditional look

Plywood door panel

Upper and lower rails frame in front of case

Plywood side panel

Bun feet with dowels add stylish detail to case

NOTE: Bun feet are -purchased

NOTE: Case top and bottom simply glued in place

NOTE: See page 51 for sources of supplies

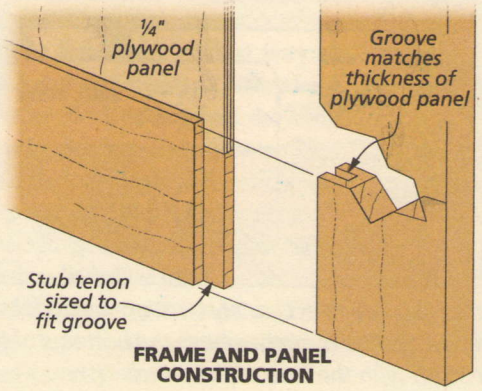

FRAME AND PANEL CONSTRUCTION

NOTE: Frame and panel case sides and doors use identical stub tenon and groove joinery

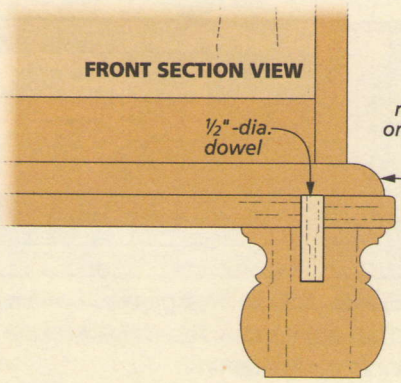

NOTE: Bun feet joined to case with dowels

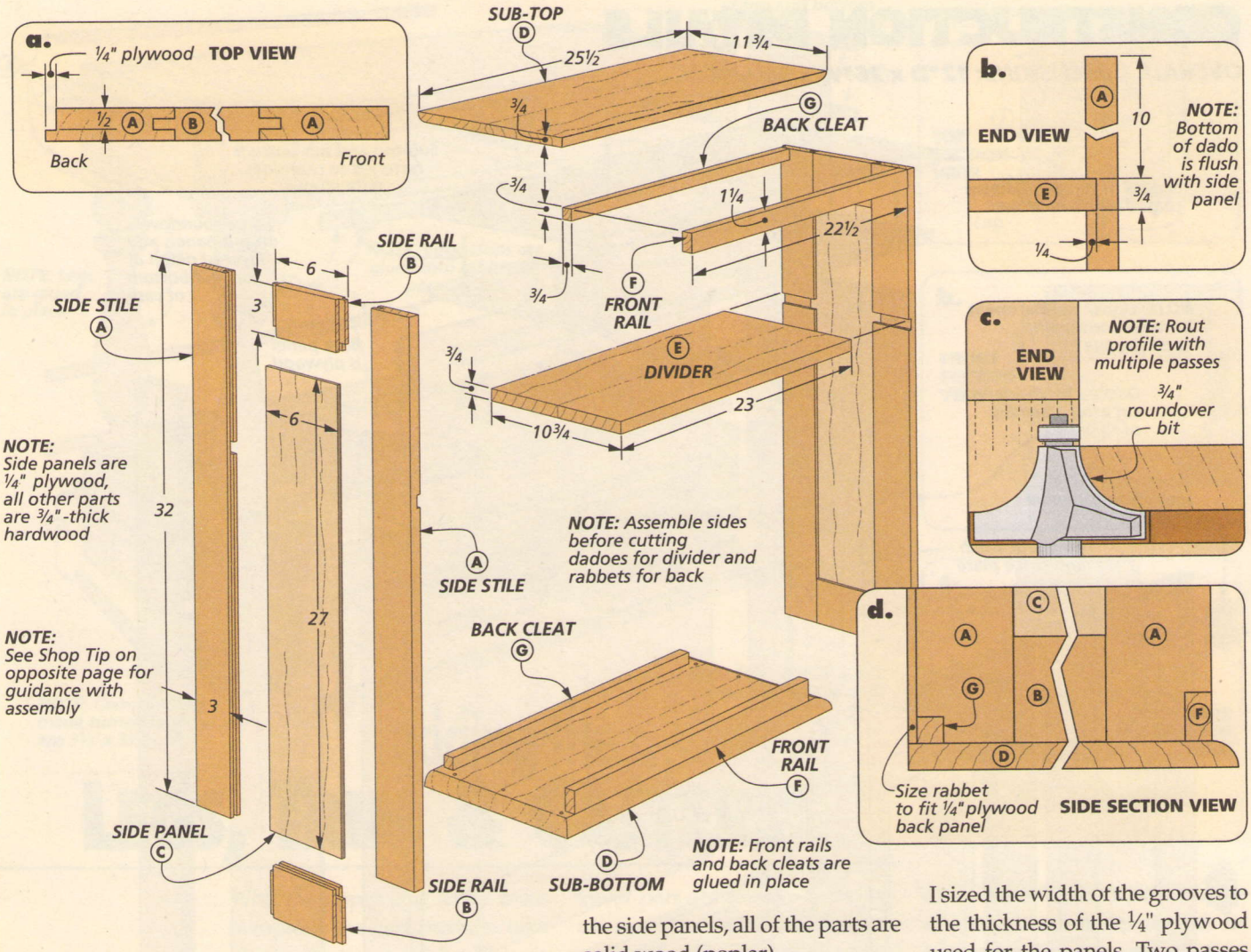

start the CASE

Building a basic framework for the case is your starting point. This consists of two frame and panel sides, a sub-top and sub-bottom, a divider, and pairs of rails and cleats, as shown above. Except for the side panels, all of the parts are solid wood (poplar).

THE SIDES. I began by assembling the two frame and panel sides. They're constructed with sturdy stub tenon and groove joinery as shown in detail 'a.'

THE JOINERY. The joinery technique I used is illustrated below. After cutting the stiles and rails to size, you'll cut ½"-deep, centered grooves in all the pieces. I sized the width of the grooves to the thickness of the ¼" plywood used for the panels. Two passes across a standard blade in the table saw will get the job done.

Next, I switched to a ¾"-wide dado blade buried in an auxiliary rip fence to cut the stub tenons on the rails. Sneak up on a good fit by adjusting the rip fence and the height of the blade.

With the joinery completed, you can cut plywood panels to

How-To: Make the Sides

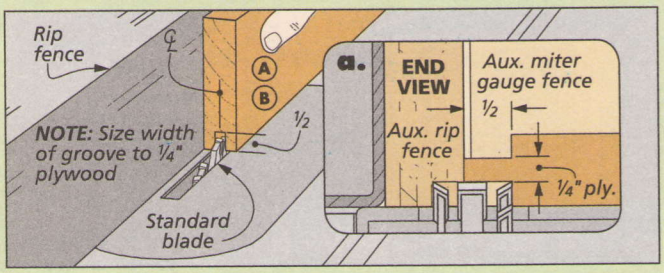

Grooves, then Tenons. *Cut centered grooves by flipping the pieces end-for-end between passes. I used a dado blade buried in an auxiliary fence to cut the tenons.*

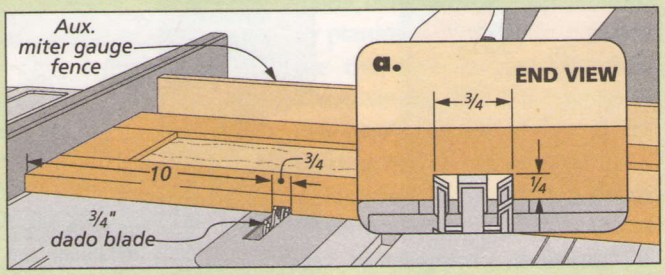

Dadoes. *Use the rip fence to accurately position the dadoes in the side assemblies. Set the blade height so the bottoms of the dadoes end up flush with the face of the panels.*

size and assemble the sides. For added strength, I glued the panels into their grooves.

DADOES & RABBETS. When the clamps come off, gather up the two side assemblies and head back to the table saw. Now, the sides need dadoes to hold the divider and rabbets for the back.

The How-To drawings on this and the opposite page show how I made both cuts. I tackled the dadoes for the dividers first (detail 'b,' opposite page). When the divider is installed, you want it to butt snug against the plywood side panels. This means that the bottoms of the dadoes should be flush with the inside face of the panels. A depth of ¼" worked for me, but if your plywood (and groove) is undersized, you'll need to cut the dadoes a bit deeper.

Don't be concerned if you score the panels lightly. This will be covered by the end of the divider.

With the dadoes completed, I set up the saw to cut the rabbets for the back panel. All you need to do is bury the blade in an auxiliary rip fence, as shown below.

SUB-TOP, SUB-BOTTOM & DIVIDER. The next task is to make the sub-top, sub-bottom, and the divider that connect the two sides. I'll just cover a few highlights of this.

All the panels are glued up from ¾"-thick stock. The sub-panels are identical and sized larger than the footprint of the case. The front and sides are rounded over (detail 'c,' opposite page). The panels are fastened to the top and bottom edges of the sides with screws. This makes assembling the case easy while adding a layer of detail at the top and bottom of the case.

The width of the divider is sized to fit flush with the front edges of the sides and flush to the shoulder of the rabbets at the back. And note that if your side dadoes are deeper than ¼", you'll have to compensate by making the divider a little longer. The goal is an inside measurement of 22½".

RAILS & CLEATS. With the sub-top, sub-bottom, and divider ready to go, all that's needed before assembly are the front rails and the back cleats. The front rails simply "frame in" the front of the case at the top and bottom. They fit between the sides flush with the front edges. The narrower back cleats are installed flush with the shoulders of the rabbets to complete the pocket for the back panel (detail 'd,' opposite).

ASSEMBLY. Once the rails and cleats are made, you can start putting the pieces together. The drawings above offer guidance.

First, I glued and clamped the divider between the sides, making certain this assembly was square. Then I installed the sub-top and sub-bottom with the rails and cleats clamped in place to act as spacers. Be sure the overhangs are even and the case is square before drilling the countersunk pilot holes and installing the screws (details 'a' and 'b'). Finally, you can glue the front rails and back cleats to the panels.

Shop Tip: Assembling the Case

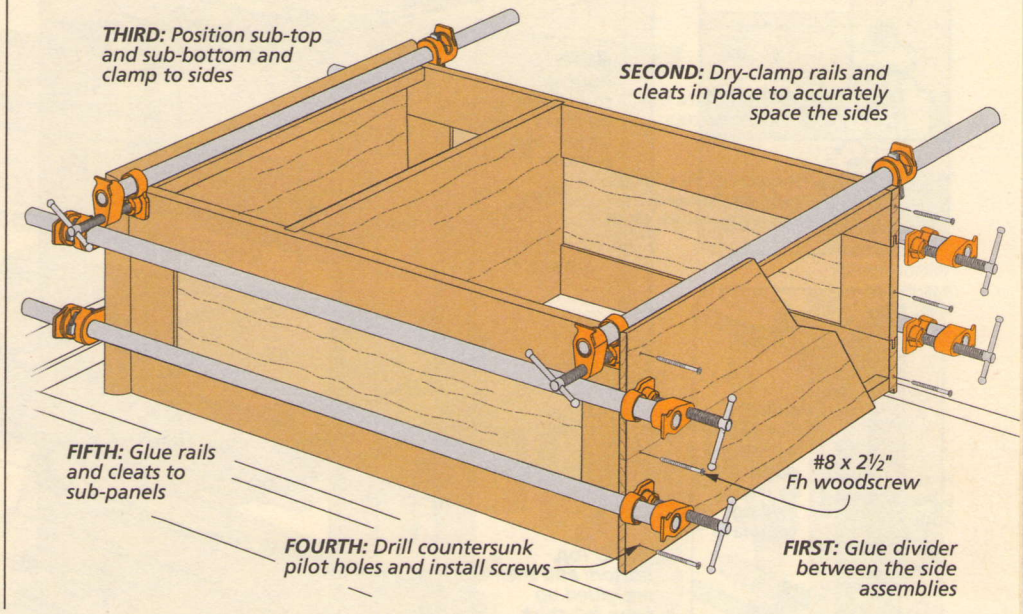

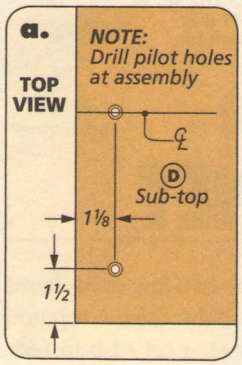

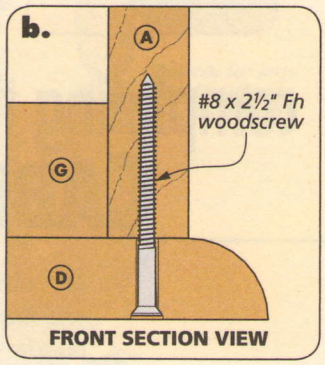

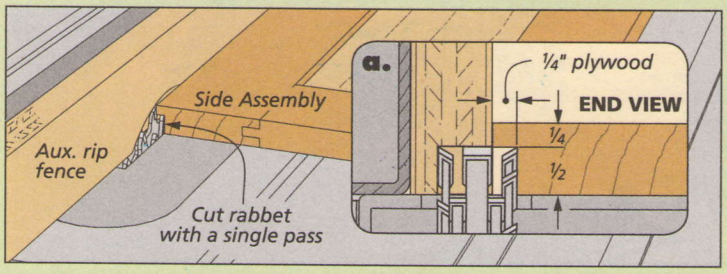

Rabbets. *You can use the same ¾"-wide dado blade to cut the deep rabbets for the back panel. Just clamp an auxiliary rip fence in place and then bury the blade by raising it to final height.*

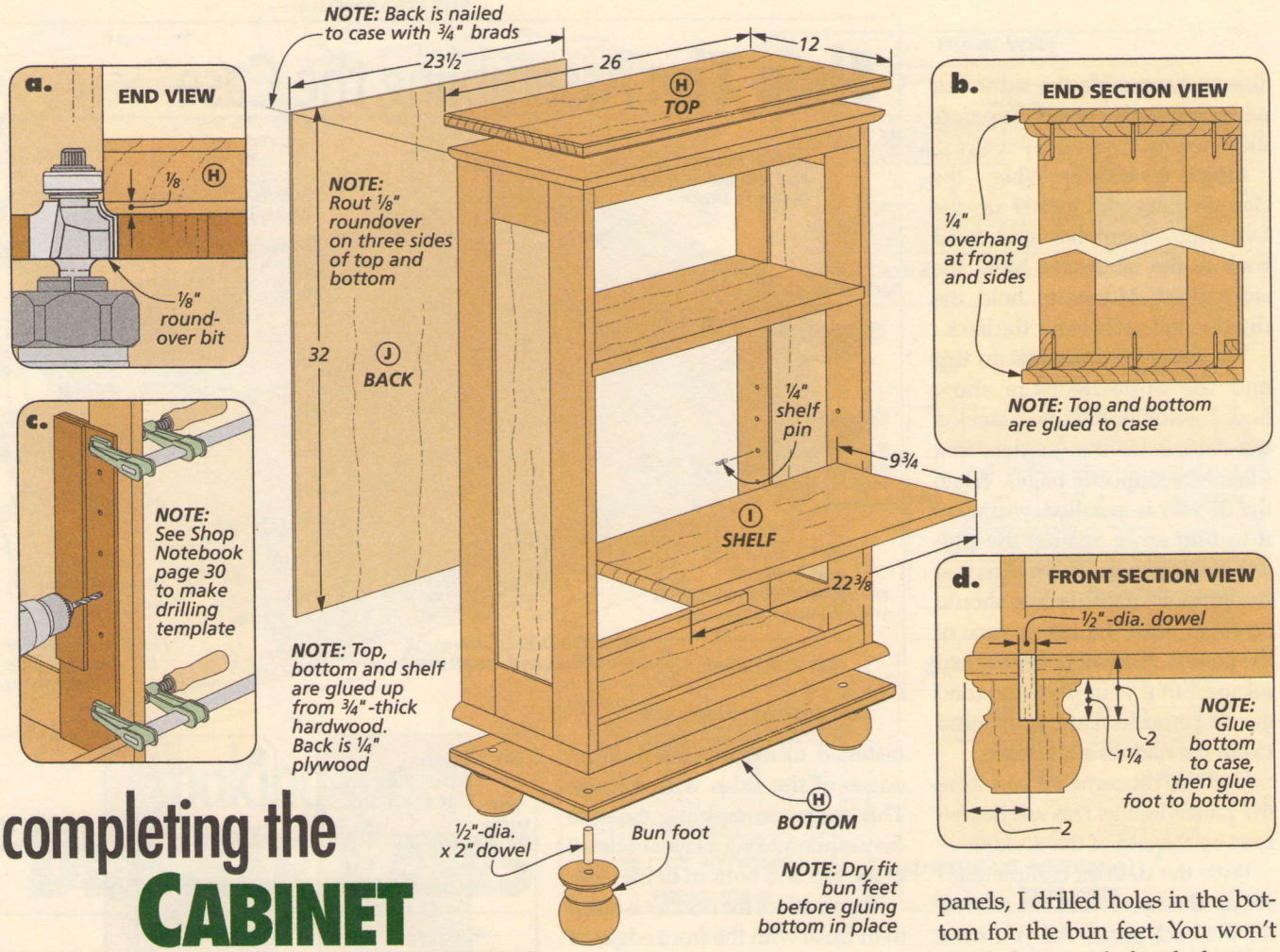

completing the CABINET

The addition of a few more items will flesh out the case. A top and bottom panel, a set of bun feet, a shelf, and the back come first. Then you can complete the job by building and installing a pair of frame and panel doors.

TOP & BOTTOM. Making the identical top and bottom panels is quick work. Start by gluing up two oversize panels from 3/4"-thick stock. When the glue is dry, you can clean them up and trim them to final size.

Next comes a short stop at the router table. Here, I softened the front and side edges of the panels with a 1/8" roundover (detail 'a').

BUN FEET. The top is ready to go. However, before I installed both panels, I drilled holes in the bottom for the bun feet. You won't attach them until after the bottom is installed. You'll simply find it's easier to get this out of the way before the bottom is attached.

The feet are attached with sections of 1/2"-diameter dowel, as in detail 'd.' The procedure I used to locate and drill the dowel holes in the feet and bottom is illustrated in the How-To box below. Once the holes are drilled, you can cut

How-To: Attach the Bun Feet

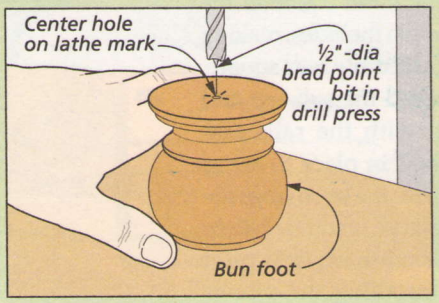

Centered Holes. *You can use the dimple left by the lathe center to locate the dowel hole in the top of each bun foot.*

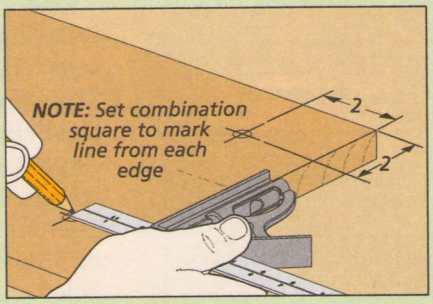

Bottom Layout. *Find the centerpoints for the holes in the bottom by marking two lines with a combination square.*

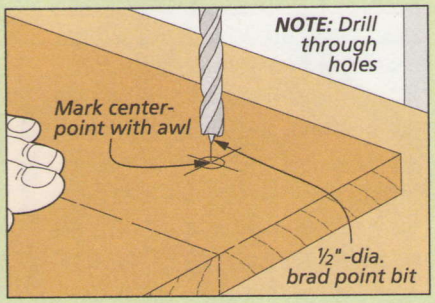

Bottom Holes. *A dimple made with an awl helps position the bit when drilling the through holes in the bottom.*

the dowels to length and then glue the dowels into the feet only.

Now the top and bottom can be glued to the case. The orientation of the panels can be seen in detail 'b' on the opposite page — flush at the back with an even overhang on the front and sides. And when the clamps come off, you can finish installing the feet.

THE SHELF. Before adding the plywood back to the cabinet, you'll want to complete the shelf and drill a series of holes for the shelf pins. Making the shelf is just a matter of gluing up a panel and then cutting it to final size.

For the shelf to sit level, the ¼"-diameter holes for the pins need to be located and aligned accurately. To accomplish this, I used a simple drilling template to index the holes (detail 'c,' opposite). You'll find more information on the this in Shop Notebook on page 30.

THE DOORS. Once the back is cut to size and tacked in place (detail 'b,' opposite), you can start on the two frame and panel doors. This should be familiar. The stub tenon and groove joinery is identical to that used on the case sides.

First you'll cut two sets of rails and stiles to size from ¾"-thick stock. The two doors are sized to allow a generous ⅛" clearance at the top, bottom, and sides.

You know the routine from here. First, cut centered grooves in all the pieces sized to the plywood you'll use for the panels. Next, a dado blade in the table saw will take care of the stub tenons. After cutting the panels to size, the doors can be assembled.

HARDWARE. No-mortise hinges make installing the doors go quickly. The only trick is positioning and aligning the doors correctly in the case opening. Double-sided tape and shims are the key. You'll find more details on the technique I used in Shop Notebook on page 31.

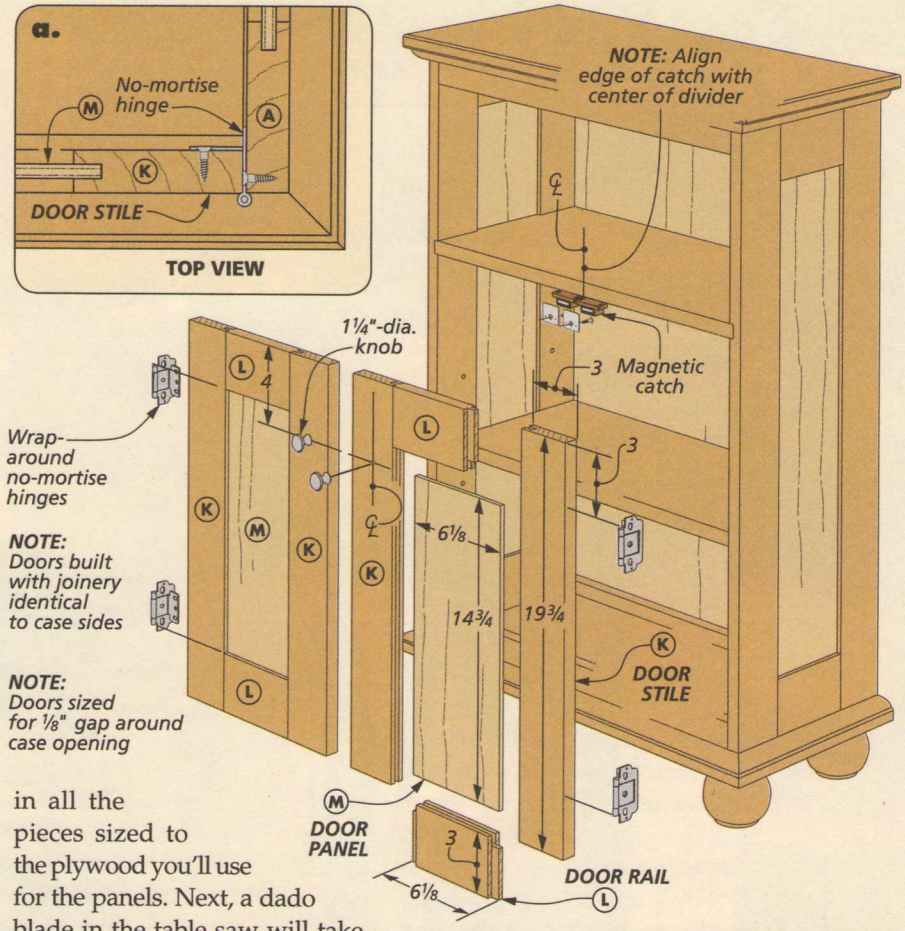

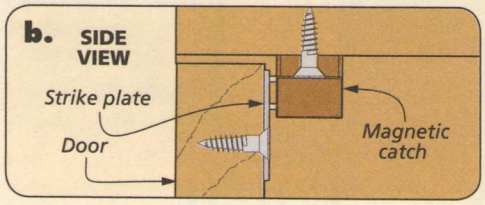

Finally, adding a pair of knobs and a pair of magnetic catches wraps up the job. And after a thorough sanding, you have a date with a paint brush. W

Materials, Supplies & Cutting Diagram

A	Side Stiles (4)	¾ x 3 - 32	H	Top/Bottom (2)	¾ x 12 - 26	•	(4) 2" x ½"-dia. Dowels
B	Side Rails (4)	¾ x 3 - 6	I	Shelf (1)	¾ x 9¾ - 22⅜	•	(12) #8 x 2½" Fh Woodscrews
C	Side Panels (2)	¼ ply. - 6 x 27	J	Back (1)	¼ ply. - 23½ x 32	•	(4) ¼" Shelf Pins
D	Sub-Top/Btm. (2)	¾ x 11¾ - 25½	K	Door Stiles (4)	¾ x 3 - 19¾	•	(2 pr.) No-mortise Hinges
E	Divider (1)	¾ x 10¾ - 23	L	Door Rails (4)	¾ x 3 - 6⅛	•	(2) 1¼"-dia. Knobs
F	Front Rails (2)	¾ x 1¼ - 22½	M	Door Panels (2)	¼ ply. x 6⅛ - 14¾	•	(2) Magnetic Catches
G	Back Cleats (2)	¾ x ¾ - 22½	•	(4) Bun Feet (3⅜" dia.)		•	(24) ¾" Brads

¾" x 6½" - 96" Poplar (Two boards @ 4.3 Bd. Ft. each)

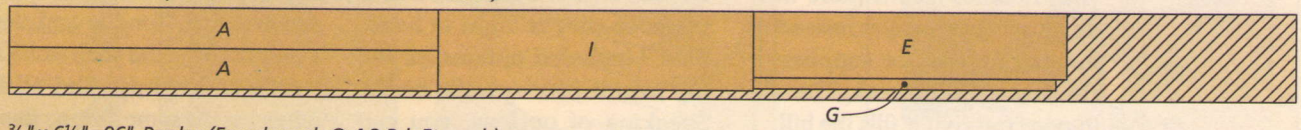

¾" x 6½" - 96" Poplar (Four boards @ 4.3 Bd. Ft. each)

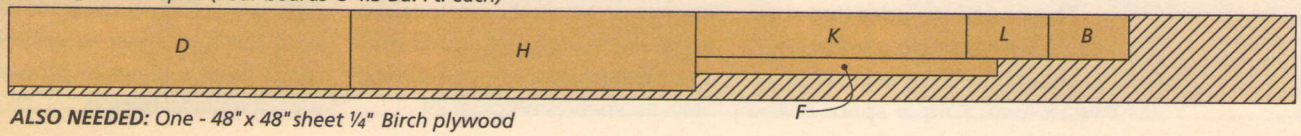

ALSO NEEDED: *One - 48" x 48" sheet ¼" Birch plywood*

modular Craft Center

With a large worksurface and lots of handy storage, this work center is sure to please even the most demanding hobbyist.

Having a dedicated space for all your hobbies means more time doing what you enjoy instead of hunting around for supplies or clearing space to work. This all-in-one craft center fills the bill.

The design includes two shelf units that support a waist-high tabletop for easy access to the work area. Ample space in the shelf units means you can store all your tools and supplies in one place, so they're right at hand. Plus, I included options for the top to suit your specific needs. Speaking of options, you can also stack the shelf units to make a tall storage cabinet. You'll find more information about building stacked shelves on page 29.

As a woodworker, you'll appreciate the finer points of the construction. Tongue and dado joinery means the shelf units are strong and sturdy. And all the joinery is the same size, so there's only one setup on the table saw. And the top is just as easy. It's made from a sheet of plywood with a replaceable top.

CONSTRUCTION DETAILS

OVERALL DIMENSIONS: 60"L x 39"W x 38"H

Top can be replaced to renew worksurface

***NOTE:** See page 28 for top insert options*

Edging wraps sub-top and replaceable top insert

Cleats placed under the top help with final assembly

European-style hinges are easy to install

Connector bolts hold top to shelf units

Stub tenon and groove joinery creates a sturdy door

Case is constructed from attractive maple plywood

Shop-made glass stop makes it easy to install or replace glass

Stop cushions door as it closes

Edging matches the front and holds back panel

Face frame hides plywood edges and adds rigidity

Tongue and dado joinery means shelf unit is strong and sturdy

False drawer front centers easily in drawer opening

Full-extension drawer slides let you see all drawer contents

Tongue and dado drawer joints are easy to make and guarantee square assembly

◄ Two shelf units stacked on top of each other give you lots of storage space for craft supplies. The details are on page 29.

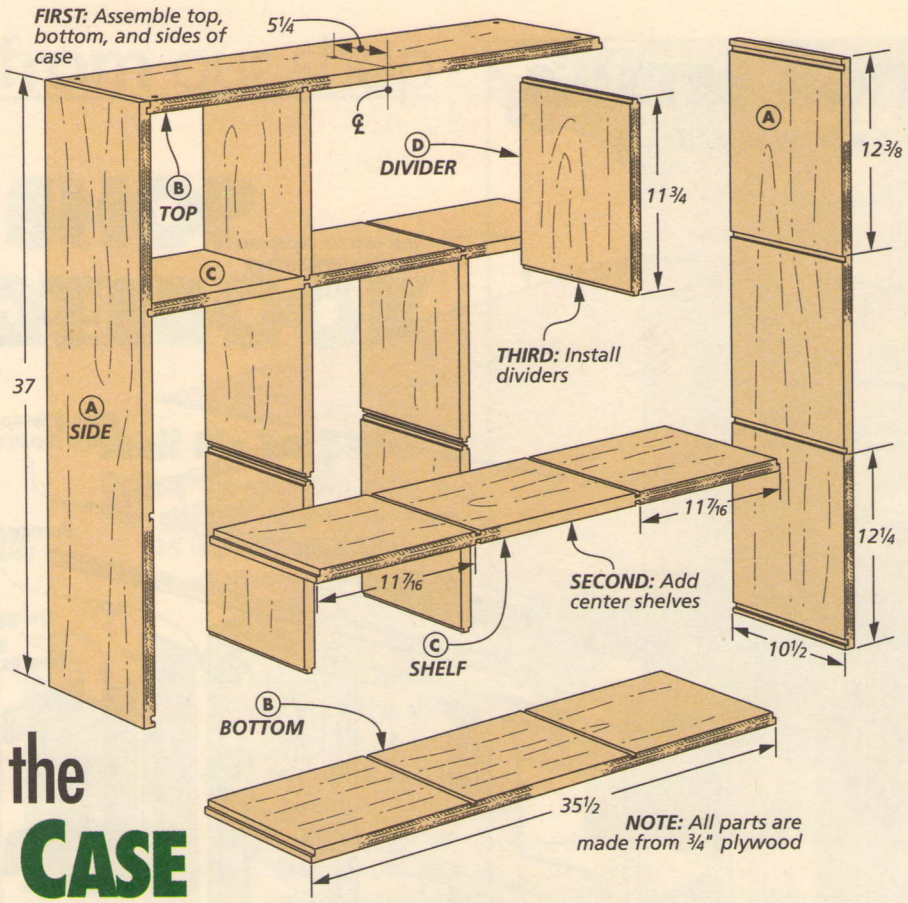

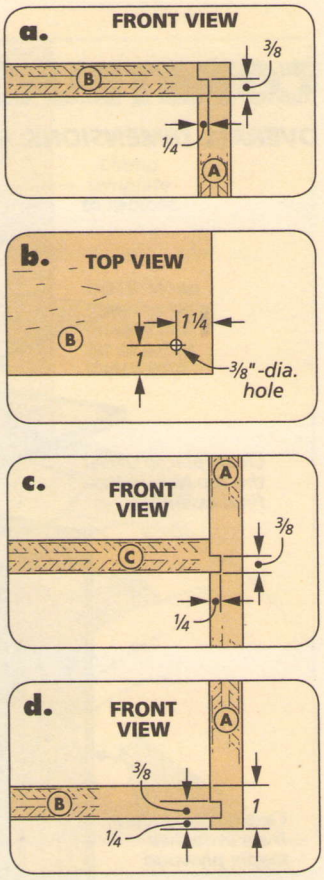

build the CASE

Each shelf unit is a square plywood case with shelves and dividers that create cubby holes for handy storage. The entire case is built using basic tongue and dado joinery for easy assembly.

CUT TO SIZE. To get started, cut the plywood to size for the case sides, top, bottom, shelves, and dividers. Next, I drilled the mounting holes in the top because it's easier to measure for placement before the joinery is cut (detail 'b').

JOINERY. Tongue and dado joinery is a reliable way to join plywood workpieces. You can make all the cuts on the table saw. The result is maximum gluing area without a lot of complicated measuring and fitting. This makes for sturdy construction that's easy to assemble. Another plus with this project is that all the tongues and dadoes are sized the same, so there's a minimum amount of setup. For precise locations of each dado, take a look at the main drawing and detail 'c.'

ASSEMBLE THE CASE. I found it easier to assemble and square up the sides, top and bottom, without the center shelves in place. Once the glue is dry, you can slide the shelves in and add the dividers. A thin layer of glue spread in the dadoes is all you need to secure them in place.

BACK. The hardboard back of the case serves two purposes. First, it

How-To: Make the Case & Back Edging

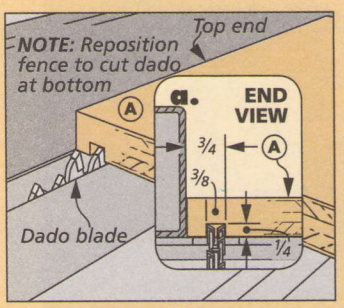

Sides. *Cut dadoes in the sides to hold the tongues in the top and bottom of the case.*

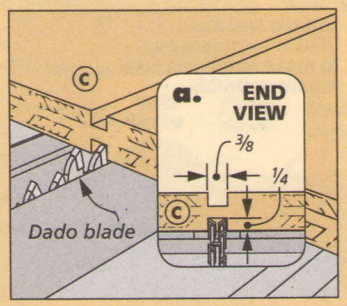

Shelves. *The shelves have dadoes on both sides to hold the dividers in place.*

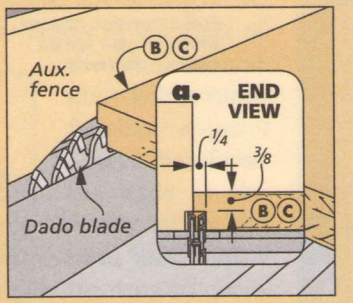

Shelf Tongues. *Use a dado blade buried in an auxiliary fence to form the tongues.*

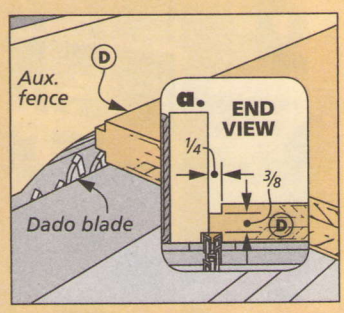

Dividers. *Each divider has a centered tongue cut to fit in the dadoes in the shelves.*

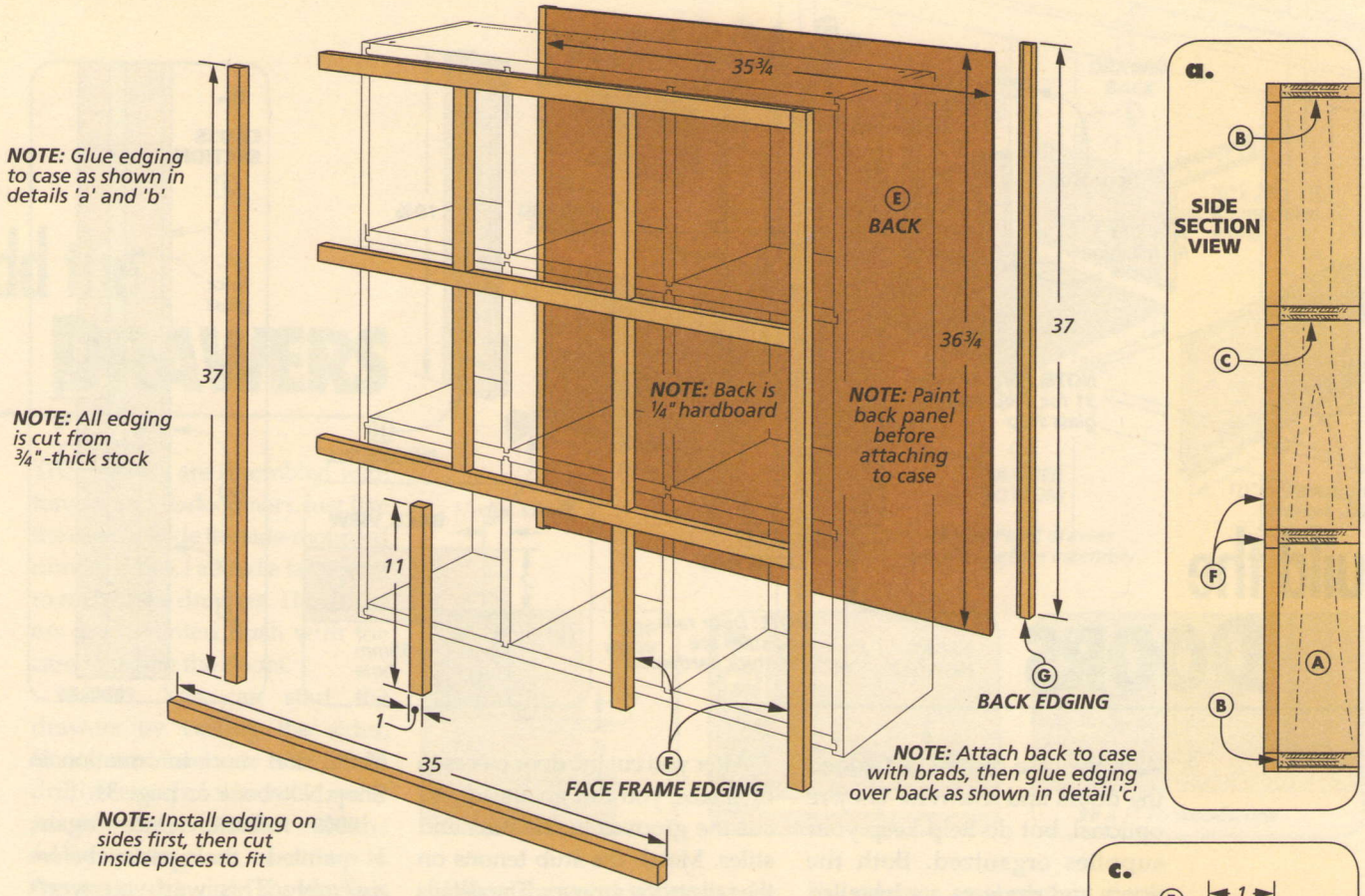

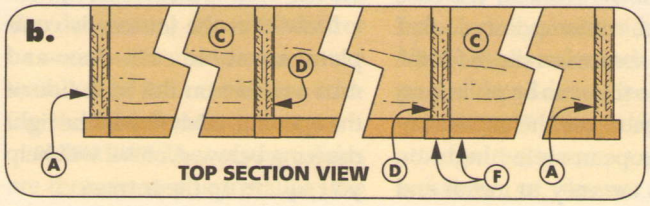

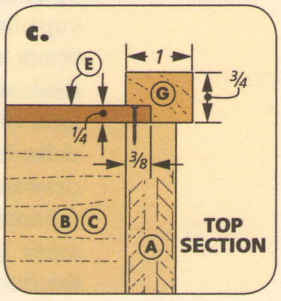

helps stiffen the entire cabinet assembly. Second, it keeps items contained within the cubbies. The back is mounted flush with the top and bottom of the case and inset ⅜" on the sides. You just need to cut the back to size, paint both sides, and attach it to the case with brads (detail 'c').

EDGING. To complete the case, I added edging to the front and back. This not only adds additional stiffness to the case, but also covers the plywood edges, giving the case a finished look. All of the edging is the same width and thickness, so I ripped it all at the same time. Then cut each piece to length as you progress with the assembly.

I started on the front with the outside edges first. The corners are simple butt joints, so no miters are necessary. Just be sure to attach these pieces flush with the inside edge of the cubbies.

The remaining edging can then be cut to fit, starting with the horizontal pieces. You'll need to leave room for the doors and drawers that you'll add later, so glue the horizontal strips flush with the top of each shelf, as shown in detail 'a.' Then add the vertical strips to complete the front. I glued the edging flush with the sides of each cubby that would hold a drawer or door. See what I mean by taking a look at detail 'b.'

When installing the edging pieces, you can clamp them by using a caul along the length of the edging and a clamp at each end. This holds the edging flat.

The edging on the rear of the case helps to secure the back panel. It also completes the look of the case by matching the front edges. You'll notice that the edging stands ¼" proud of the case. A rabbet that fits over the edge of the back panel makes it all possible. (For details on making the rabbet, see the drawing at left.)

Complete the case by gluing and clamping the edging to the case back, as shown in detail 'c.' While the glue dries, you can start on the doors and drawers.

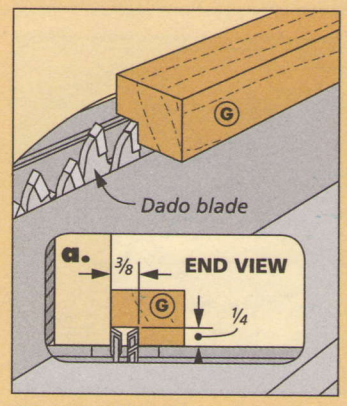

Back Edging. *Cut a rabbet in the back edging pieces to fit around the case back.*

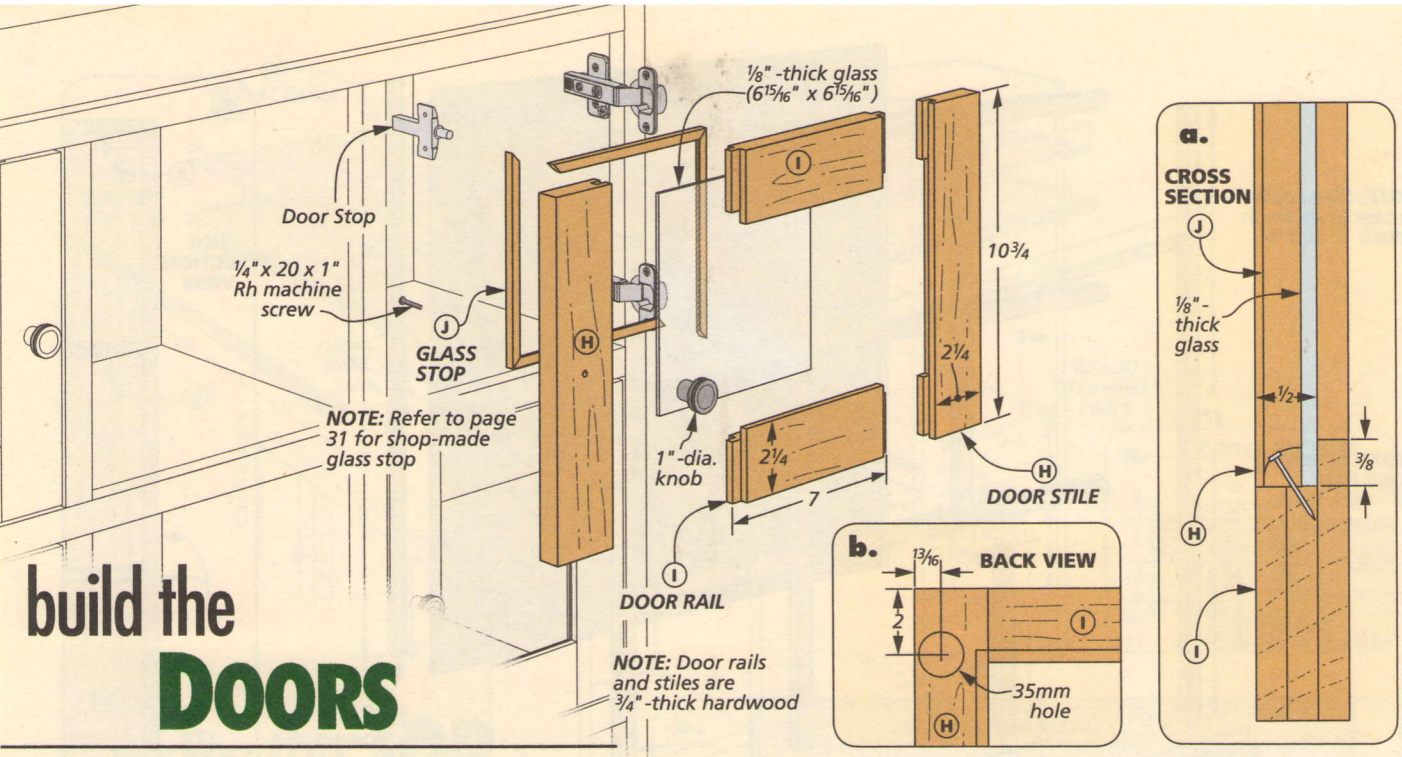

build the DOORS

With the case complete, I added the doors and drawers. They're optional, but do help keep your supplies organized. Both the doors and drawers are installed flush with the front of the case for a clean, contemporary look. I chose full-extension slides for the drawers so they can be pulled out far enough to see the entire contents. European-style hinges on the doors are easy to install and easy to adjust too.

DOORS. The doors are constructed with stub tenons and grooves. Shop-made quarter round holds the glass panel in place.

After you cut the door pieces to final size, you can go ahead and cut the grooves in the rails and stiles. Match the stub tenons on the rails to the grooves. The details are shown in the box below.

Now that the joinery is complete, assemble each door and rout a rabbet on the back side of the opening, as shown in the right drawing below. A chisel will help you square up the corners.

QUARTER ROUND. The glass panel is held in place with narrow pieces of quarter round. I routed the quarter round on an extra-wide blank and cut the molding free. You'll find more information in Shop Notebook on page 31.

DOOR ASSEMBLY. Once again, I painted the parts before assembly. This way you won't need to mask off the glass. After the paint is dry, install the glass in the door and tack the quarter round in place (detail 'a').

HINGES AND KNOBS. Before you move on to the drawers, go ahead and mount the doors to the case and add the door stops. I used a small nylon knob on each door. You can find more information about the hardware for this project in Sources on page 51.

How-To: Create a Glass Panel Door

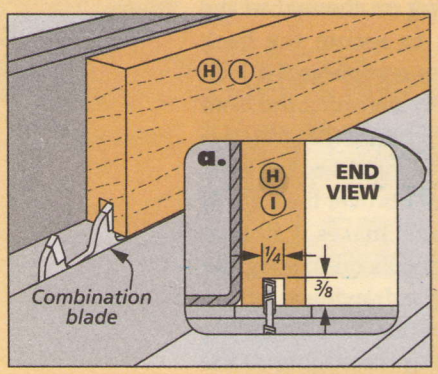

Groove. *Using a single saw blade, cut one side of the groove and then flip the workpiece for a dead-center groove.*

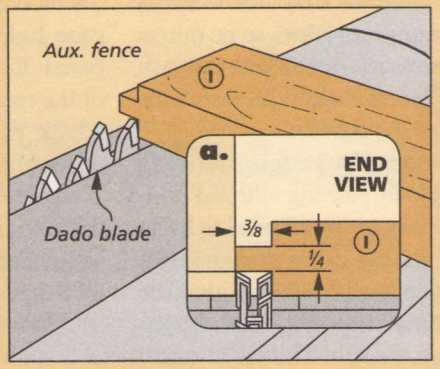

Stub Tenon. *With an auxiliary fence on the rip fence, raise the blade to sneak up on a snug fit for the stub tenon.*

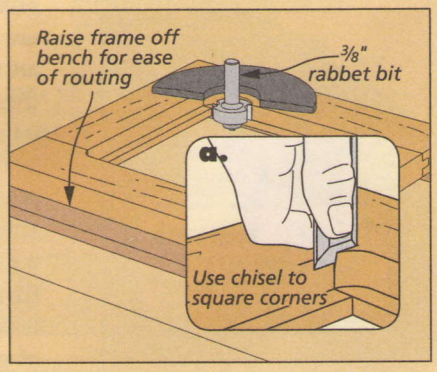

Rabbeted Opening. *A rabbeting bit creates a pocket for the glass panel. Use a chisel to clean up the corners.*

add the DRAWERS

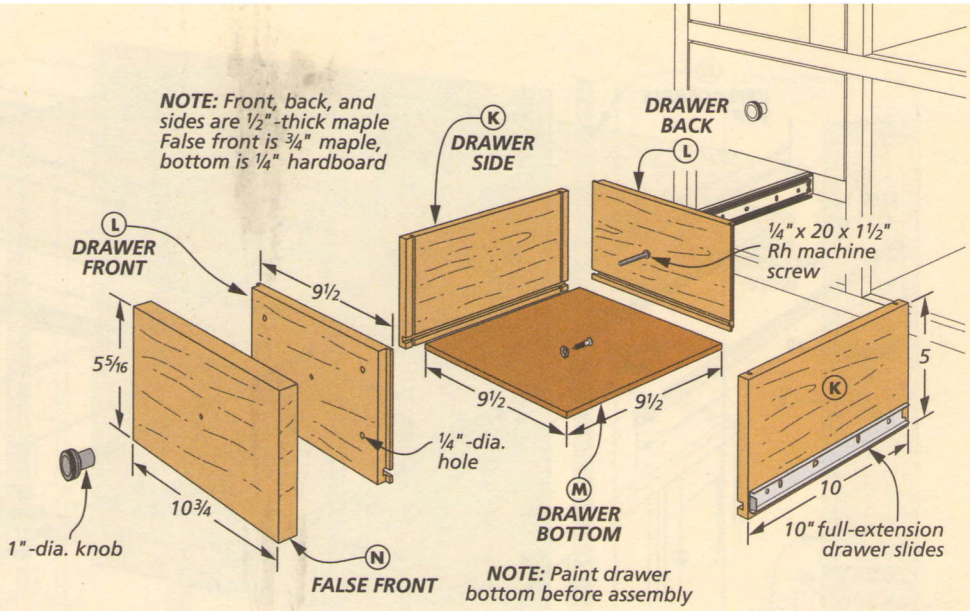

The drawers are assembled with tongue and dado joinery, just like the case. To hide the side-mounted drawer slides, I added a false front to each of the drawers. The drawers are mounted flush with the case to match the doors.

DRAWERS. You can start the drawers by cutting the sides, fronts, and backs to size. Then drill oversize holes in each drawer front for the screws that hold the false front in place, as shown in the main drawing above. This will allow you to center the false front in the case opening and then tighten the screws for a perfectly aligned fit.

Your next step is to cut the joinery for the drawers, as shown in detail 'a.' There's more information about this in the box below. Finally, cut the groove for the drawer bottoms in each piece. After completing the joinery, cut the drawer bottoms to size and paint them.

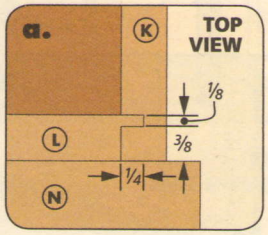

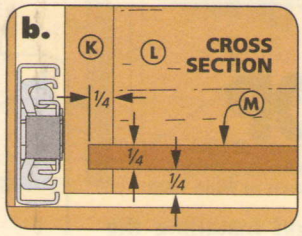

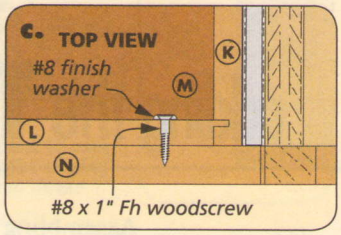

When the paint is dry, you're ready to assemble and install the drawers. I found it better to wait until the drawers are installed in the case before adding the false fronts.

DRAWER SLIDES. The two-part slides are the next step in installing the drawers. You can see how they fit in detail 'b.' It's easiest to attach the slide to the cabinet first. Be sure to mount the drawer slides flush with the inside face of the edging, as shown in detail 'c.' This will allow for the false front to fully seat inside the case. Next, align and attach the other part of the slide to the drawer.

FALSE FRONT. The false front is attached with screws and finish washers, as shown in detail 'c.' Just cut the workpiece to size, paint it, and attach it to the drawer. When the front is installed, you can drill a hole for the knob and attach it.

Drawer Joinery

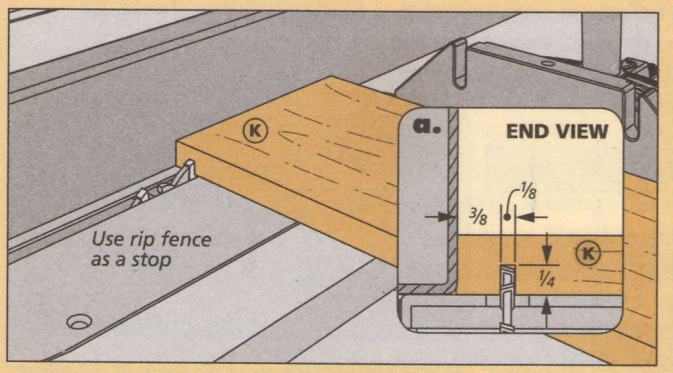

Cut the Dadoes. *Use a standard saw blade to cut the dadoes in the drawer sides. Use the rip fence as a stop and the miter gauge to feed the stock across the blade.*

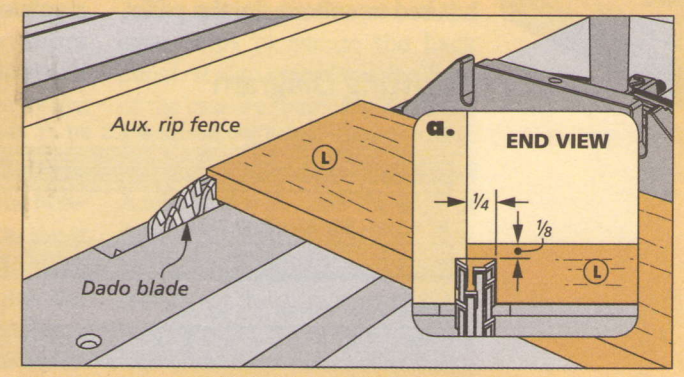

Tongues. *Bury a dado blade in an auxiliary fence to cut the tongues on the ends of the drawer fronts and backs. Sneak up on a perfect fit by adjusting the blade height.*

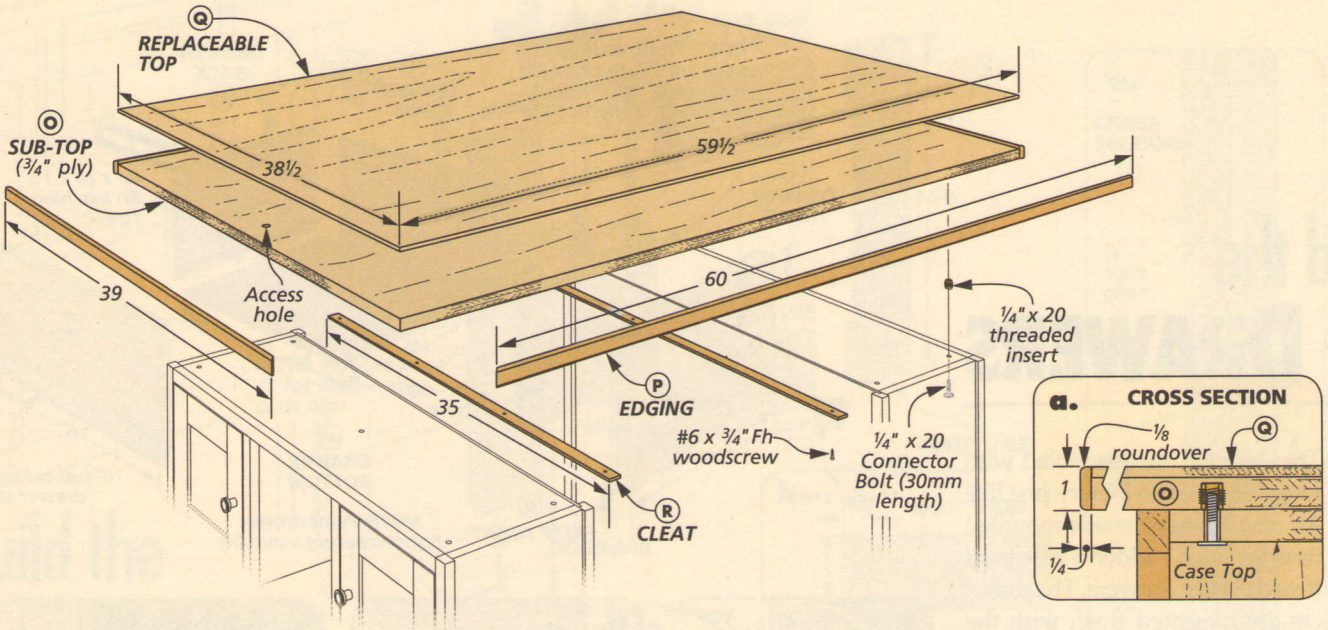

adding the TOP

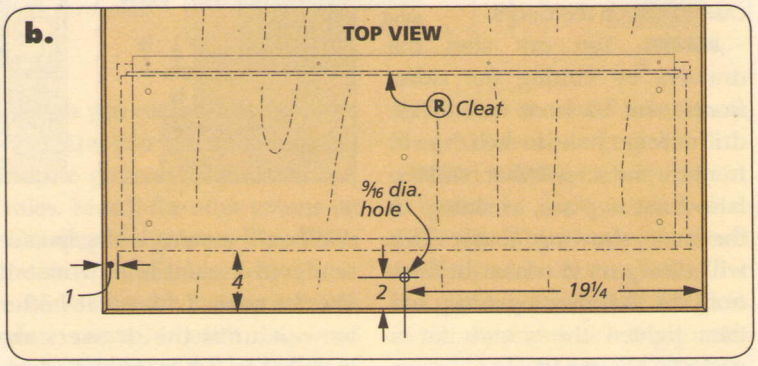

Assembling and installing the top will complete the craft table. The base for the top is cut from ¾" plywood. Then this panel is wrapped with 1"-wide edging. A replaceable top panel fills in the recess created by the edging. I used ¼" plywood for the top panel, but glass, melamine, or hardboard are all good choices. The top is fastened to the two cases with connector bolts and threaded inserts (detail 'a').

I started by cutting the plywood sub-top to size. Once this is done, you can drill holes for the inserts. You'll also want to drill a larger through hole near one edge of the base (detail 'b'). This hole can be used to remove the top panel, if it becomes scared or dirty and needs to be replaced.

EDGING. Detail 'a' shows the edging I applied to the top. To make the ¼"-thick edging, I resawed blanks from ¾"-thick stock. Then after planing the blanks to final thickness, I routed a roundover on two edges. Finally, miter the edging to fit and glue it to the sub-top, flush with the bottom face.

CLEATS. Next, you'll need to add a pair of cleats to the underside of the top, as shown in detail 'b.' These cleats will help you align the top and the two shelf units when you assemble the table.

FINAL ASSEMBLY. With the top complete, all that remains is to attach it to the two shelf units. Then you can cut and fit a replaceable top in the recess. I used double-sided tape to hold it. No matter what type of panel you choose, you'll have a large, sturdy worksurface for your craft of choice. W

Cutting Diagram

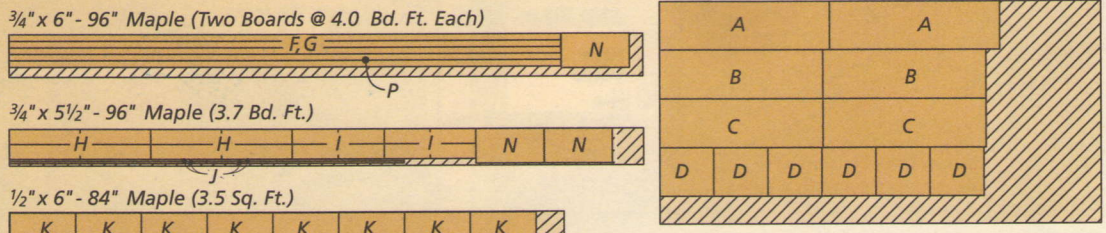

ALSO NEEDED: *One 48" x 96" sheet of ¾" maple plywood for Sub-Top (O)*
One 48" x 96" sheet of ¼" maple plywood for Replaceable Top (Q)
One 48" x 96" sheet of ¼" hardboard

DESIGNER'S NOTEBOOK

Stacking it Up

If you just need extra storage space without the worksurface, you can stack two shelf units to make a tall storage case. as shown in the drawing on the right. You'll save valuable floor space too.

To stack the shelf units, drill holes in the top of the lower unit and install threaded inserts in the bottom of the upper unit. To connect the two units, you'll need to use 40mm-long connector bolts (see detail drawing below).

Should you decide at a later time to use the shelf units as a base for a worksurface, the two shelf units can be separated just by removing the connector bolts. For the present, you have a handy storage unit.

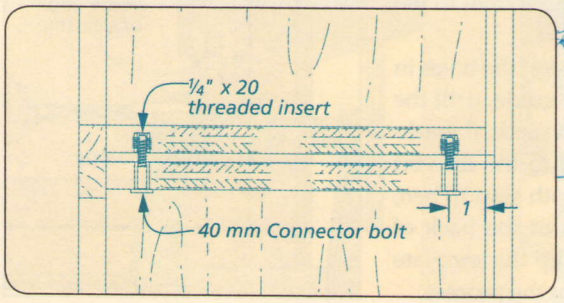

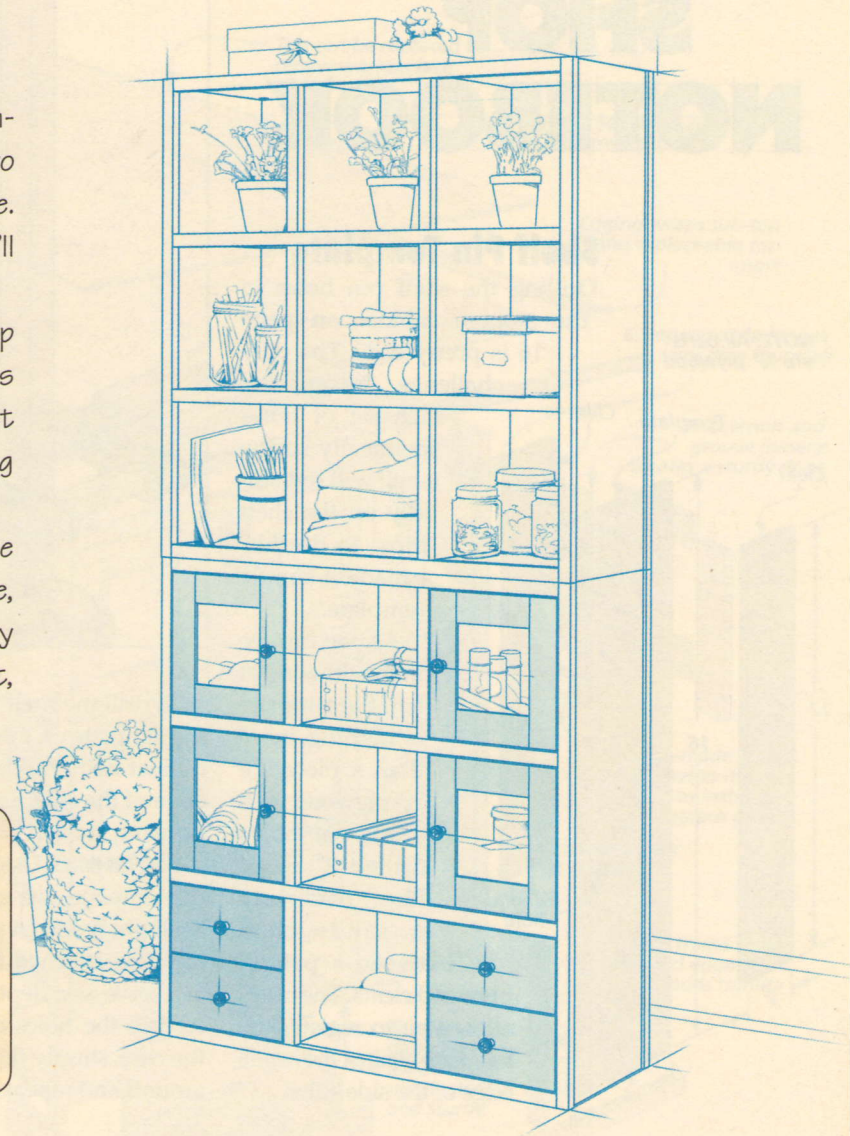

Materials & Supplies

A Sides (4)	3/4 ply. - 10 1/2 x 37
B Tops/Bottoms (4)	3/4 ply. - 10 1/2 x 35 1/2
C Center Shelves (4)	3/4 ply. - 10 1/2 x 35 1/2
D Dividers (12)	3/4 ply. - 10 1/2 x 11 3/4
E Back Panels (2)	1/4 hdbd. - 35 3/4 x 36 3/4
F Back Edging (4)	3/4 x 1 - 37
G Face Frame Edging (2)	3/4 x 1 - 580 (rgh.)
H Door Stiles (8)	3/4 x 2 1/4 - 10 3/4
I Door Rails (8)	3/4 x 2 1/4 - 7
J Glass Stop (2)	1/4 x 1/4 x 230 (rgh.)
K Drawer Sides (8)	1/2 x 5 x 10
L Drawer Fronts/Backs (8)	1/2 x 5 x 9 1/2
M Drawer Bottom (4)	1/4 hdbd. - 9 1/2 x 9 1/2
N False Drawer Front (4)	3/4 x 5 5/16 - 10 3/4
O Sub-Top (1)	3/4 ply. - 38 1/2 x 59 1/2
P Top Edging (1)	1/4 x 1 - 200 (rgh.)
Q Replaceable Top (1)	1/4 ply. - 38 1/2 x 59 1/2
R Cleats (2)	1/4 hdbd. - 1 x 35

- 3/4" Brads
- (4 pr.) 120° Inset European-Style Hinges
- (8) 1"-dia.Knobs
- (4 pr.) 10" Full-Extension Drawer Slides
- (16) #8 x 1" Fh Woodscrews and Finish Washers
- (4) 6 5/16" x 6 5/16" Glass Panels (1/8" thick)
- (10) 1/4"-20 Threaded Inserts
- (10) 1/4"-20 Connector Bolts (30mm length)
- (4) Door Stops
- (8) #6 x 3/4" Fh Woodscrews
- (4) 1/4" x 1" Rh Machine Screws
- (4) 1/4" x 1 1/2" Rh Machine Screws

SHOP NOTEBOOK

Shelf Pin Template

Drilling the shelf pin holes in the storage cabinet on page 16 is pretty easy. The only challenge is spacing each set of holes identically so the shelf will rest solidly on the shelf pins. To do this, I made a simple template.

As you can see in the drawing at left, the template is nothing more than a piece of ¼" plywood with a row of holes drilled 2" apart. The template is sandwiched between a pair of plywood cleats. The cleats allow you to register the template against the inside edge of the side stiles.

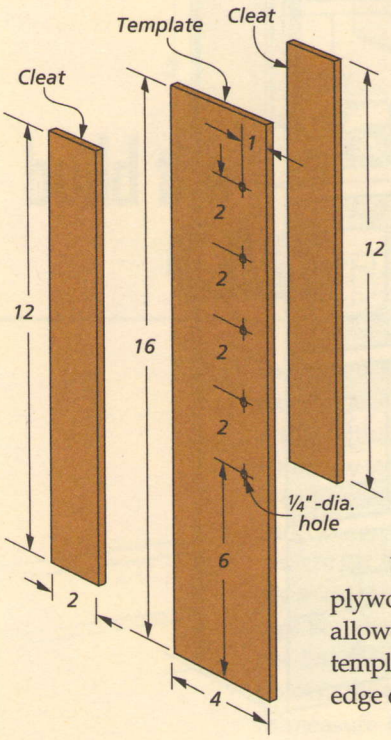

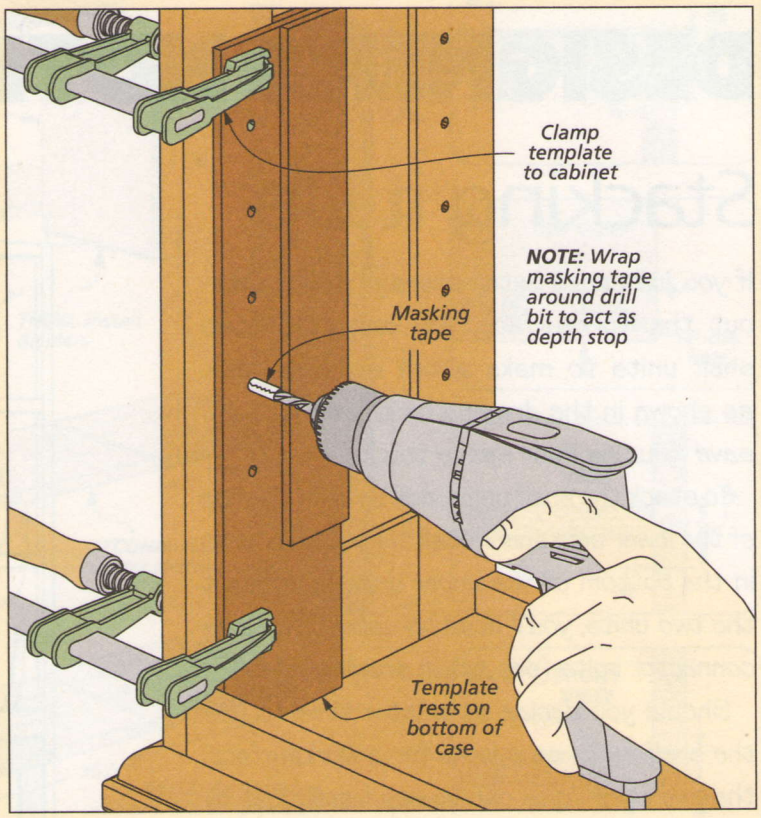

To drill the shelf pin holes, rest the template on the bottom of the cabinet with the cleat against the edge of the stile, as shown in the drawing above.

DRILL THE HOLES. Using the holes in the template as a guide, drill the shelf pin holes. (A piece of masking tape attached to the drill bit can serve as a depth stop.) Then, to drill the holes at the back of the case, simply flip the template around and repeat the process.

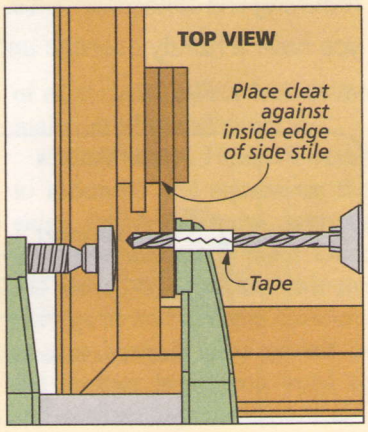

Chamfering a Dowel

The towel holders for the kitchen workstation on page 32 are nothing more than 1"-dia. dowels, cut to length. To ease the edges of the ends of the holders and give them a more finished appearance, I chamfered the ends at the router table. The trick to this is to create a "channel" to hold the dowel while routing the chamfer.

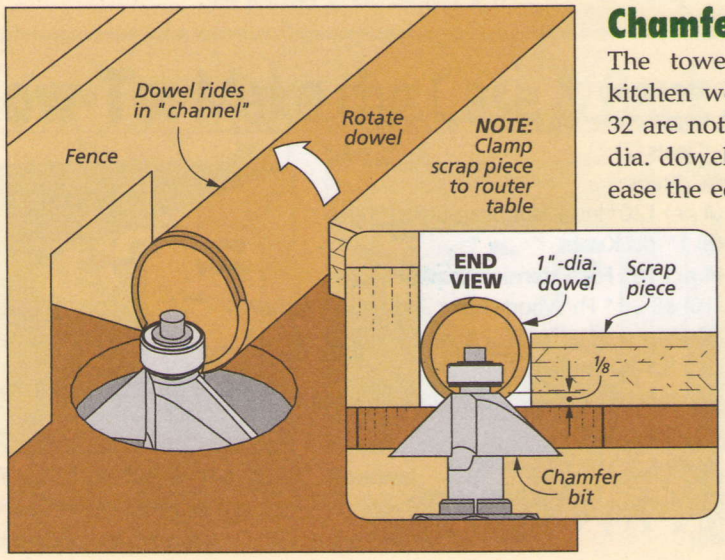

I started by installing a chamfer bit in the router and raising it so the top of the cutting edge was ⅛" above the surface of the table. Then I clamped a scrap piece to the table to hold the dowel against the fence, as shown in the drawing at left.

To chamfer the end of the dowel, simply feed it into the bit until the end contacts the bearing. Then rotate the dowel (toward the fence) to create the chamfer. Once you've routed the entire end, just slide the dowel back away from the router bit.

Leg Notches

To cut the leg notches in the plywood case tops and bottoms of the kitchen workstation, I used the table saw. In order to support the workpiece, I added a tall auxiliary fence to my miter gauge. And to keep the spacing of the cuts consistent, I taped a scrap block to my rip fence and used it as a stop, as shown in the drawing at right.

I cut each notch in two passes, standing the workpiece on edge to make the first cut and then standing the workpiece on end to complete the notch.

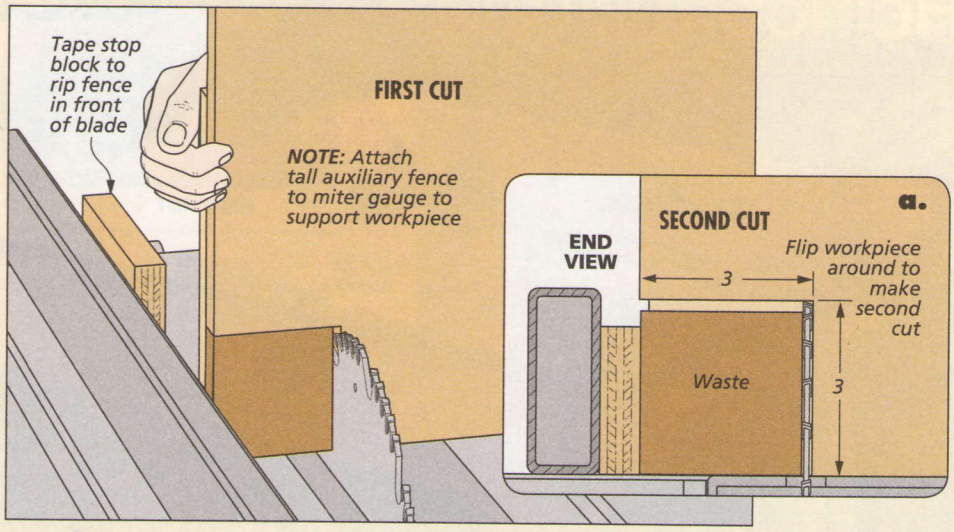

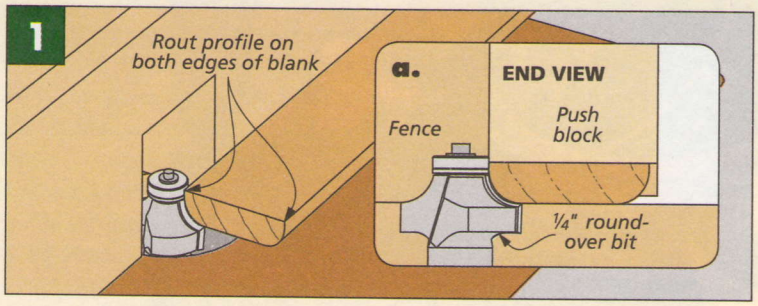

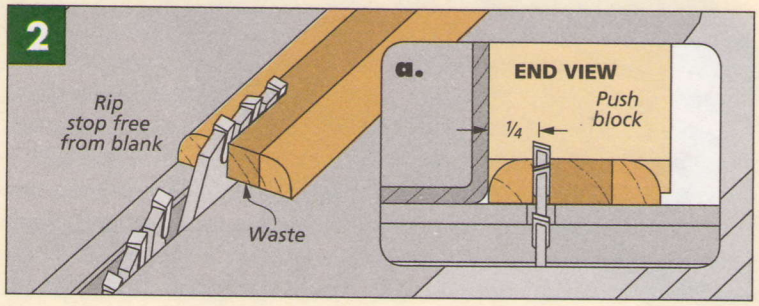

Glass Stop

The glass panels in the doors of the craft table on page 22 are held in place with quarter-round stop. To make this glass stop, I began by planing a wide blank to final thickness (¼"). Once this was done, I routed a roundover on both edges of the blank, as you see in Figure 1 at left.

To complete the glass stop, I simply ripped it free from both edges of the blank at the table saw (Figure 2). A push block helps to safely guide the workpiece past the blade. All that's left after this is to miter the pieces to length and install them into the door frames.

No-Mortise Hinges

The doors of the storage cabinet are installed with wrap-around, no-mortise hinges. I installed the hinges to the doors first. (They simply wrap around the edge and back of each door and are screwed directly in place.)

To locate the hinges on the sides of the cabinet, I placed a piece of double-sided tape on each hinge (Figure 1). Then I pressed the door against the side of the cabinet, using an ⅛"-thick shim to provide clearance, as shown in Figure 2.

With the hinges taped in place, I carefully opened the door and used the hinge as a template to drill the screw holes (Figure 3). Then it's just a matter of removing the tape and screwing the hinges to the sides of cabinet. W

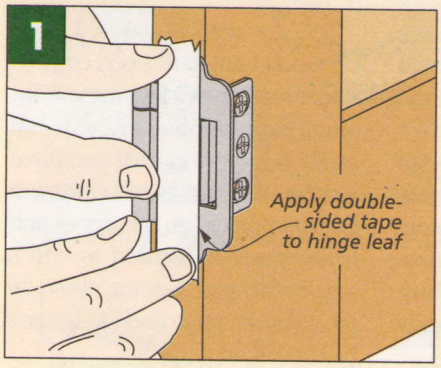

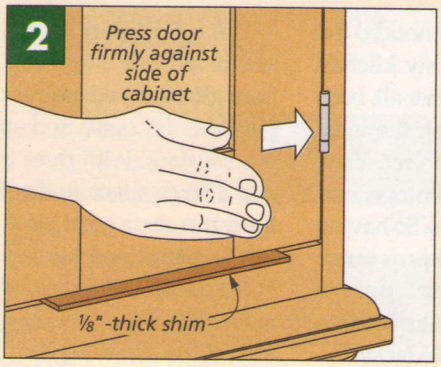

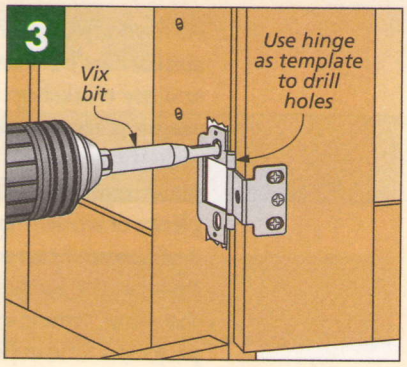

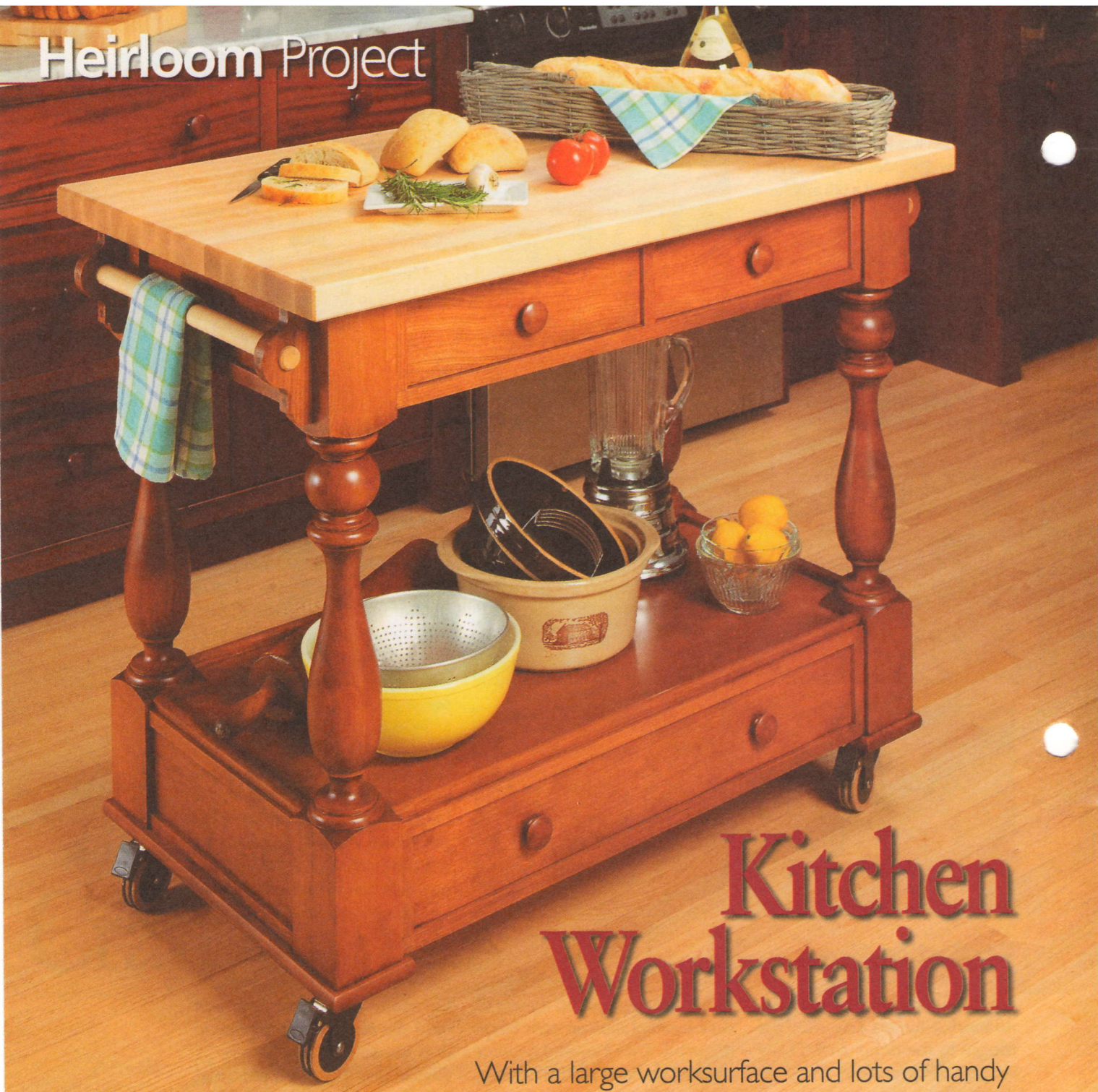

Kitchen Workstation

With a large worksurface and lots of handy storage, this roll-around cart is sure to be a hit.

As a woodworker, I've noticed the similarities between my kitchen and my workshop. After all, both are used for preparing the individual pieces of a project. Each place requires tools, storage, and plenty of worksurfaces. So having a roll-around cart makes as much sense in the kitchen as it does in the shop. It helps make kitchen projects a little easier to tackle.

The rolling cart shown above has it all. The large top, made from glued-up, edge-grain maple, provides a durable and attractive worksurface. With three drawers and a large space under the top, the cart is also a great place to store a few often-used kitchen items. Full-extension drawer slides help take advantage of every square inch of the drawer space.

For the drawer cases, I used plywood with hardwood edging. The turned cherry legs came from an on-line supplier, but you can easily turn your own if you have a lathe. You can even customize the space between the upper and lower cases. I decided to add a small wine rack (see the photo on the opposite page and Designer's Notebook on page 39).

CONSTRUCTION DETAILS

OVERALL DIMENSIONS: 24"D x 41½"W x 35⅛"H

NOTE: Top is laminated edge-grain maple. You'll find plenty of helpful tips for gluing up a wide top on page 40

Top attaches to upper case with screws

Plywood edges are covered with shop-made edging

Upper and lower cases are assembled using dado joints and screws

Towel holder brackets are cut out at the band saw

Bracket mounting screws are concealed with wood plugs

Purchased legs give the cart a classic look

Upper case houses two, small drawers

Bullnose edge stop forms a lip on top of lower case

Sources for legs and hardware on page 51

Plywood cases provide sturdy foundation for cart and create spaces for drawers

NOTE: Drawer sides and backs are ½" maple; fronts are ¾" cherry

Corners of cases are notched to fit the square portion of the legs

Lower case features a single, large drawer

Locking casters make the cart mobile, but provide plenty of stability when in use

Caster mounting board attaches to legs with screws

Drawers are built using locking rabbet joinery

▲ The kitchen cart is the perfect place for a small wine rack. The details for building the wine rack can be found on page 39.

CORNER CONSTRUCTION DETAIL

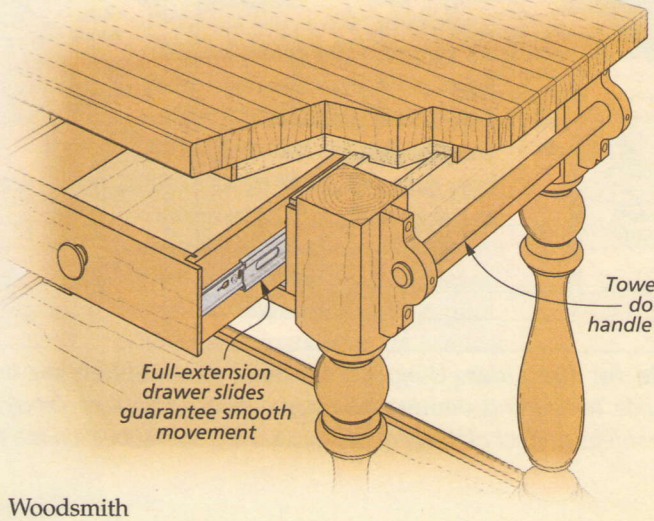

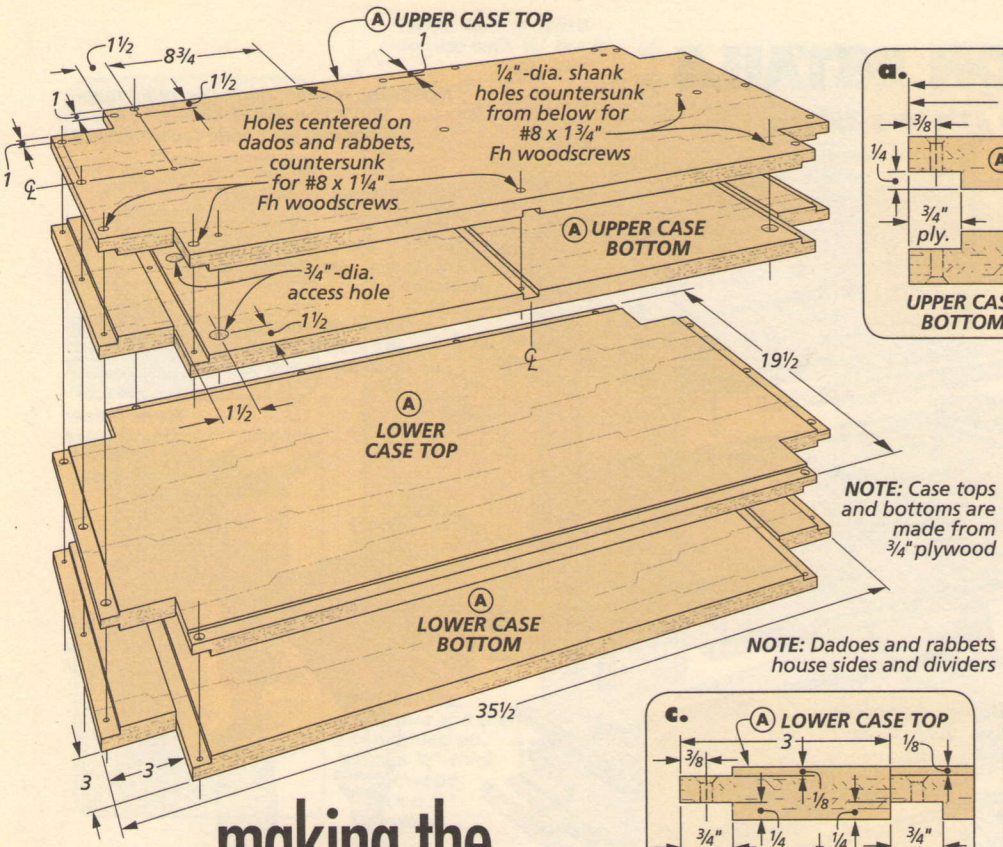

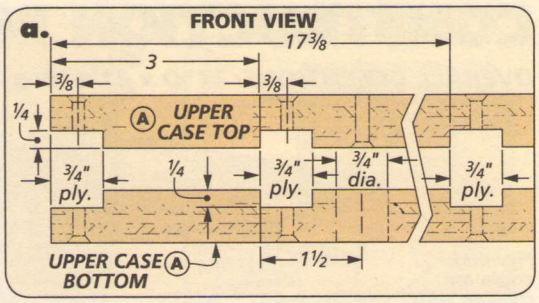

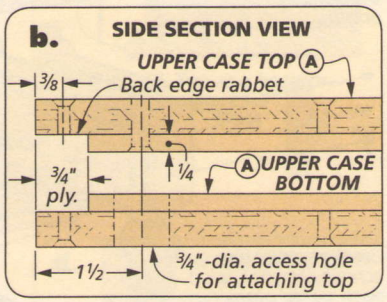

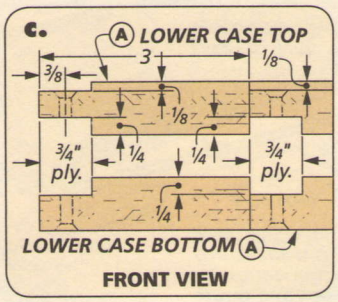

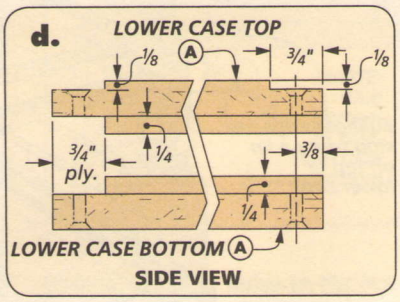

making the DRAWER CASES

The upper and lower cases are at the heart of this project. In addition to housing the drawers, they provide the foundation for attaching the legs, top, and the casters. So assembling the pair of cases is the first priority. The lower case is a little taller than the upper one, but they're built using the same techniques. If you build them together you can avoid repeating saw setups. Just be sure to make careful layout marks to keep the pieces properly oriented.

THE TOPS & BOTTOMS. I started by cutting the plywood tops and bottoms to final size. Each set requires a different combination of dadoes and rabbets to hold the sides and dividers, with opposite faces being mirror images of each other. So an accurate alignment is only possible if the workpieces and the joinery cuts are square.

Next, I cut the notches in the corners of all four pieces. Turn to page 31 to find a safe and reliable technique for making these cuts using the table saw.

To cut the joinery, I installed a stack dado blade matching the thickness of the plywood. The details above show you where the dadoes and rabbets are located and the box at left demonstrates how to make the cuts. Finish up by cutting the shallower rabbets on the top face of the lower case. These rabbets will hold a bullnose edge stop you'll add later.

At this point, you can drill the countersunk screw holes at the locations shown in the main drawing. Note that one set of holes is for fastening the sides and another set is used to attach the top. The large-diameter holes in the bottom of the upper case provide access to the screws when adding the top.

How-To: Cut Dadoes & Rabbets

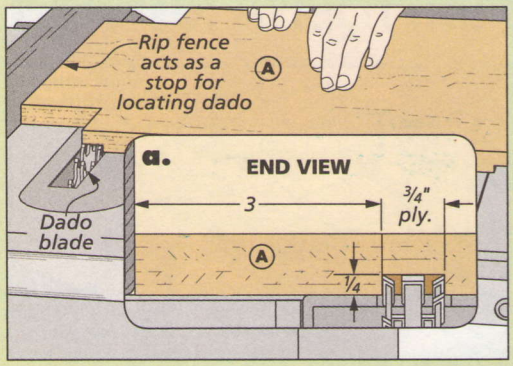

Dado for the Sides. *Using the rip fence as a guide for cutting the dadoes for the sides guarantees perfect placement.*

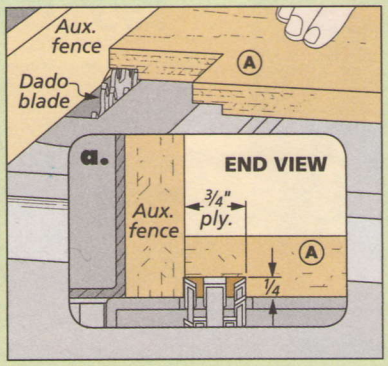

Rabbets on the Ends. *Adding an auxiliary fence makes cutting the rabbets on the ends a breeze.*

SIDES & DIVIDERS. After cutting a plywood blank for the sides, divider, ends, and back to width, cut each piece to final length. You can also cut the fillers that fit between the sides and ends.

I installed a dado blade and used the miter gauge to cut a centered dado in the back of the upper case. This dado houses the divider. While you're at it, cut the rabbets on the ends of both back pieces.

Now change the width of the dado blade to ¼" and cut the dadoes in the sides. These dadoes fit the tongues on the fillers.

You'll also need to cut dadoes in the ends. The box below shows the technique for this and for making the tongues on the fillers, as well.

DRY FIT. It's a good idea to take a few minutes and dry fit the assembly to make sure everything is square and the joints have a snug fit. You can also drill pilot holes in the sides, ends, dividers, and fillers.

ASSEMBLY. Once you're happy with the fit, take everything apart again and get ready to move on to the final assembly. Start by adding glue and screwing in the upright pieces from the bottom first. This way, you can position and fasten the drawer slides before attaching the top. (You'd be hard pressed to reach inside the case later and screw them in place accurately.)

I've found the easiest way to add drawer slides is to make a spacer block to support the slide while driving the screws. This simple technique not only guarantees uniform positioning of the slides, but it also makes sure they're installed level.

All that remains is to add the case tops. Using screws makes this a pretty stress-free process.

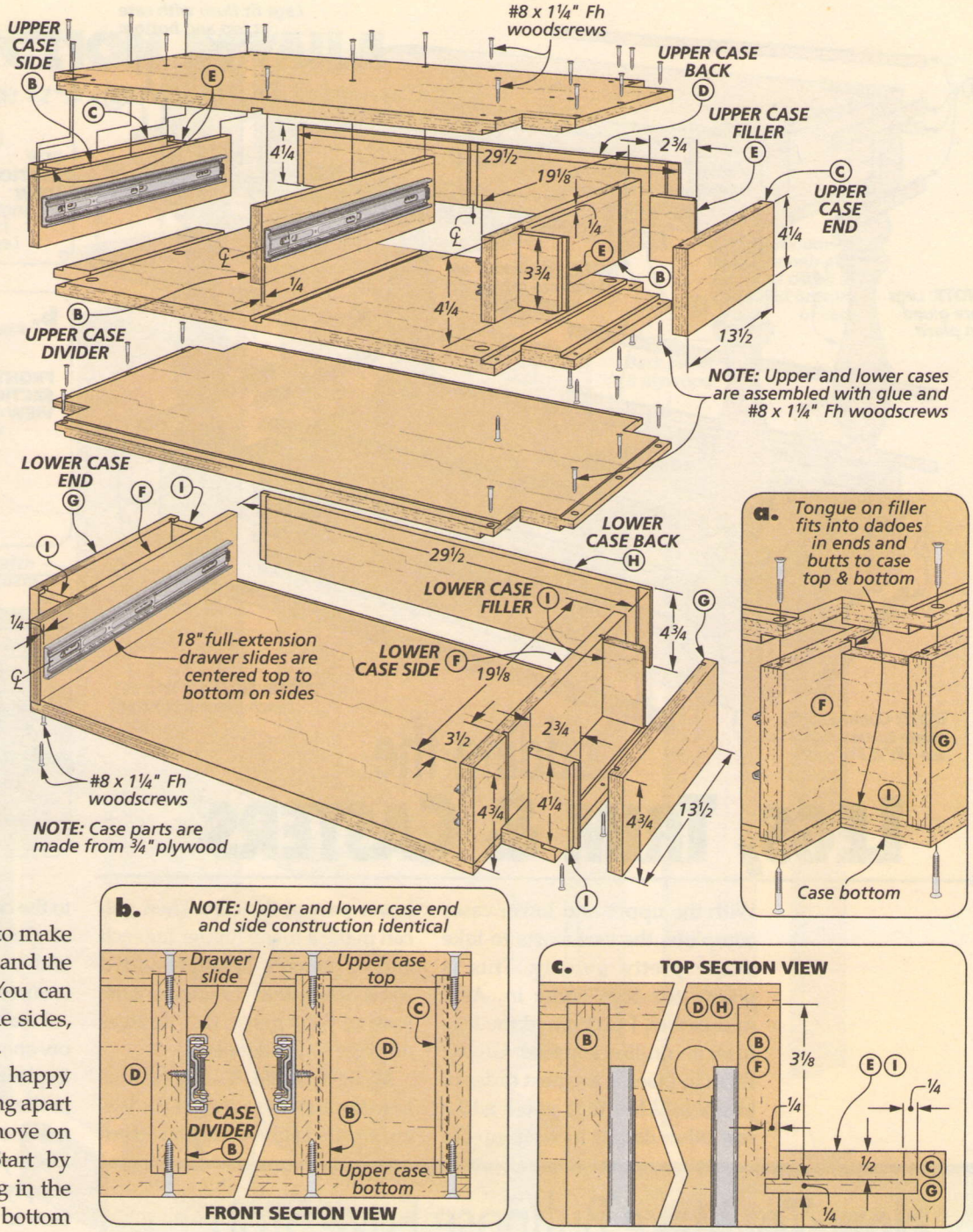

How-To: Cut End Assembly

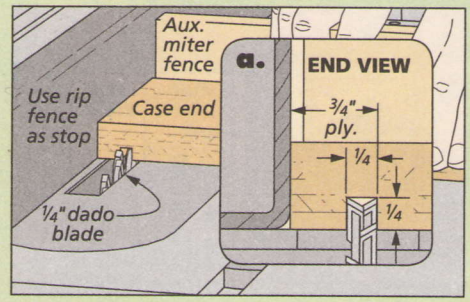

Dado the Ends. *Using an auxiliary fence on the miter gauge, cut the narrow dado on both ends of the end pieces.*

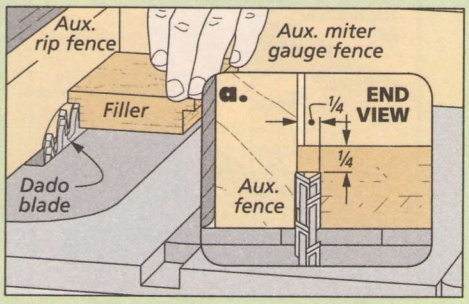

Rabbet the Fillers. *When cutting the tongues, sneak up on the depth of cut to achieve a snug fit in the dadoes.*

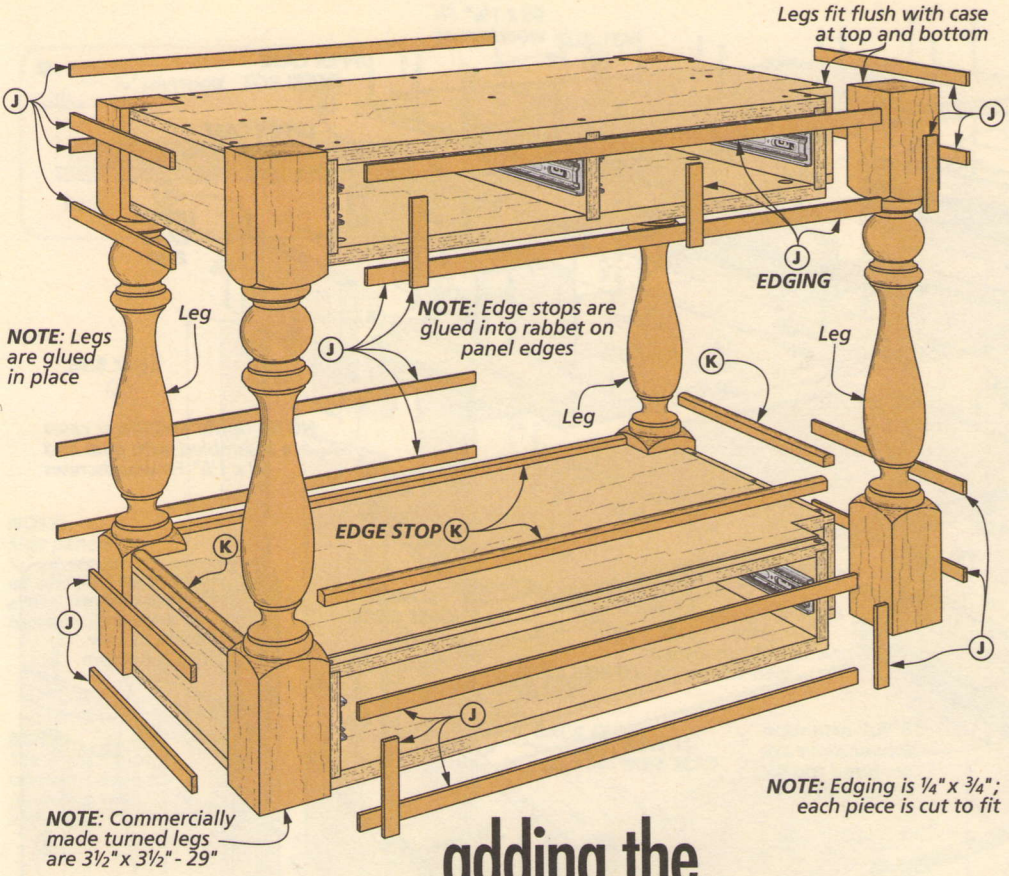

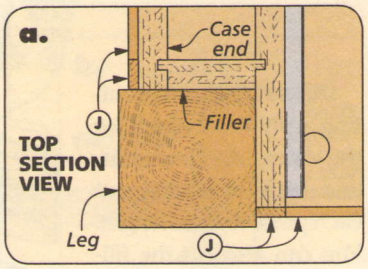

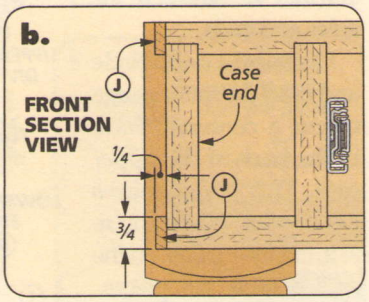

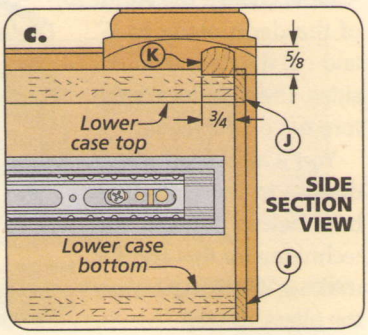

adding the LEGS, TRIM & CASTERS

With the upper and lower cases complete, the cart starts to take shape pretty quickly. This is where the legs come in. As I said earlier, I purchased the legs from an on-line supplier. Gluing them in place is the next order of business. After that, you'll add a few other details to wrap up the lower part of the cart. Then you can make a towel holder for each end of the cart. Finally, I added some casters that complement the look of the project. (See sources on page 51 for details.)

ATTACHING THE LEGS. It's a good idea to make sure the edges of the legs are square before you attach them to the cases. Then it's just a matter of gluing them in the notches in both cases. The large glue surface ensures a strong joint.

I started by dry fitting the legs on one end and clamping them in position. Then I checked the fit in the case on the opposite end to make sure the legs were parallel. Once you're happy with the fit, simply add glue and clamps. Be sure to keep the top and bottom ends of the legs flush with the cases throughout the assembly.

HARDWOOD EDGING. At this point, you're ready to cover the plywood edges with some shop-made, hardwood edging. I started by planing a wide blank to match the thickness of the plywood. Then, simply rip the edging to just over ¼" thick. Finish up by planing it to final thickness.

To make sure you get a gap-free fit on the edging, it helps to cut and fit each piece individually. Blue painter's tape works well as a clamp to hold the edging in place while the glue dries.

How-To: Make Bullnose Edge Stop

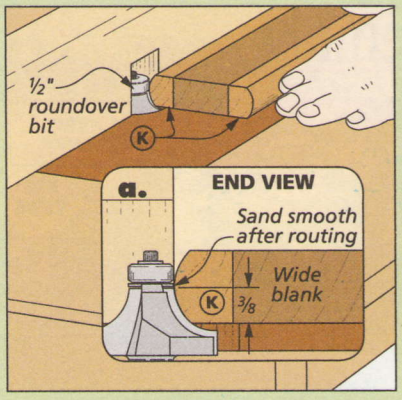

Routing the Bullnose Profile. *Use a roundover bit to rout the profile on both edges of a wide blank.*

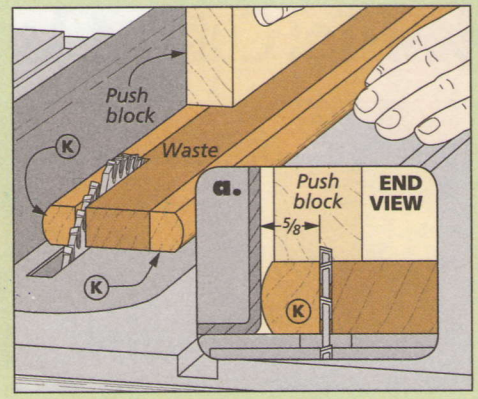

Ripping the Strips. *Set the rip fence on the table saw to match the height of the edging and use a push block to rip the strips.*

EDGE STOP. I added a bullnose edge stop on the top of the lower case. This helps keep anything you store there from sliding off. Once again, it's a simple process to make the bullnose stop. The box at the bottom of the opposite page walks you through it. Glue the edge stop in place in the rabbets you cut in the top.

TOWEL HOLDERS. The towel holders on each end of the cart serve double duty as convenient handles for moving the cart. You can make the brackets using the pattern in the right margin. After attaching them to the case, add a dowel towel rack. The box below shows how to go about it.

I added a small chamfer to the ends of the towel holder. (See Shop Notebook on page 30.) Detail 'a' shows how the dowel plugs cover the screw holes. You can also see how I used a dowel to pin the towel rack in place.

ADDING THE CASTERS. I chose wood casters with rubber "tires" for the kitchen cart. To attach the casters, you'll first need to add a mounting board. As you can see in the main drawing and in detail 'c,' I routed the same bullnose profile I used for the edge stop on all edges of the mounting boards. Attach the mounting boards to the underside of the lower case with screws, then attach the casters.

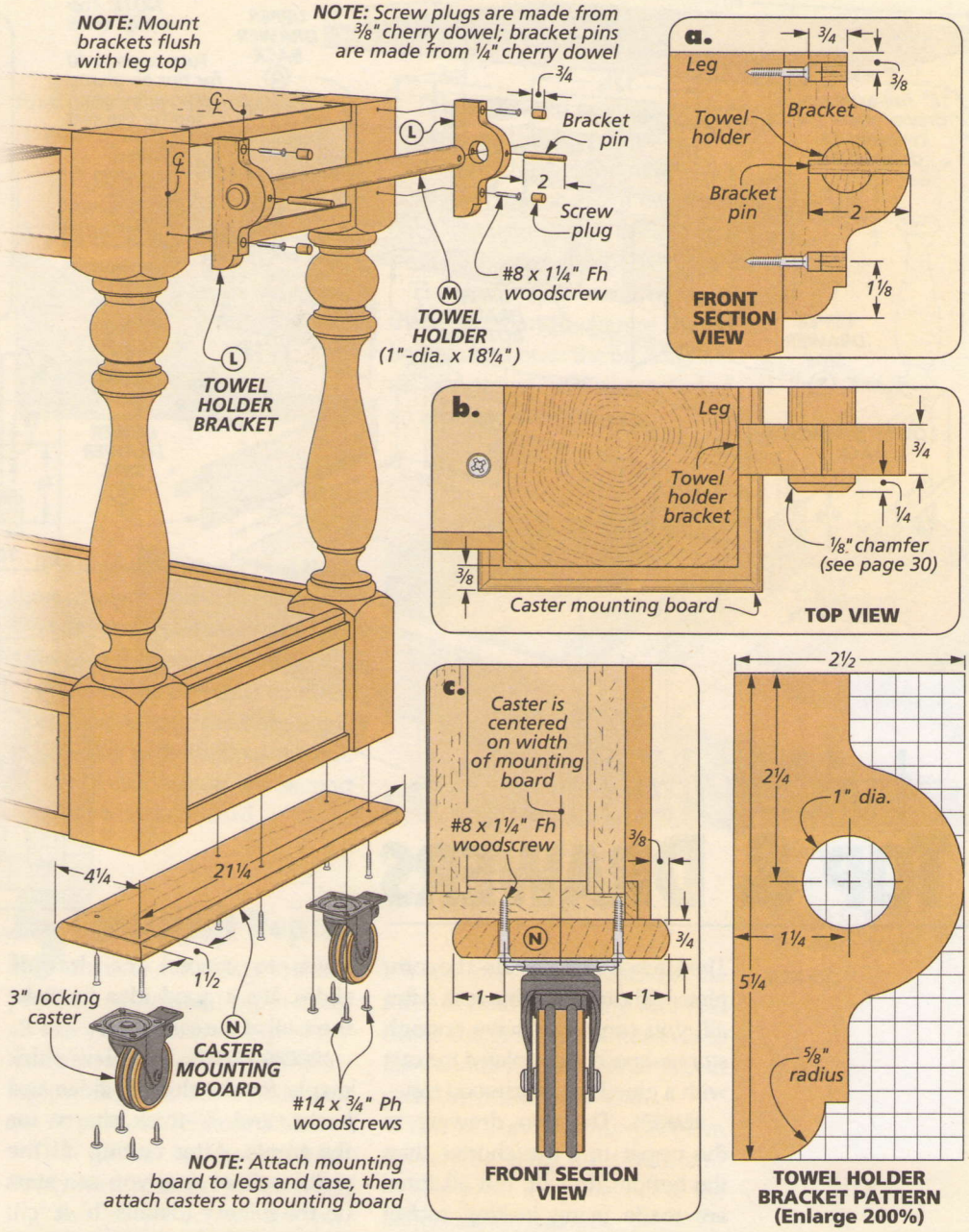

Shape the Towel Holder Brackets

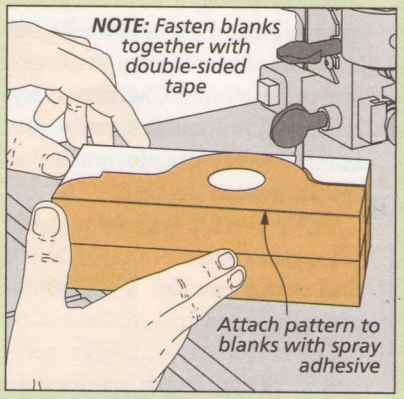

Cutting Out the Bracket. *Cut the brackets to shape at the band saw and then sand them smooth.*

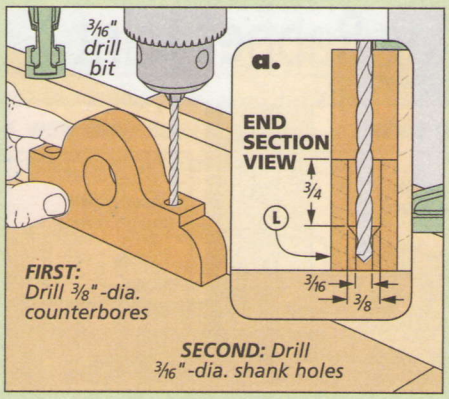

Drill the Holes. *After drilling the hole for the towel holder in the bracket, drill the counterbores and the shank holes.*

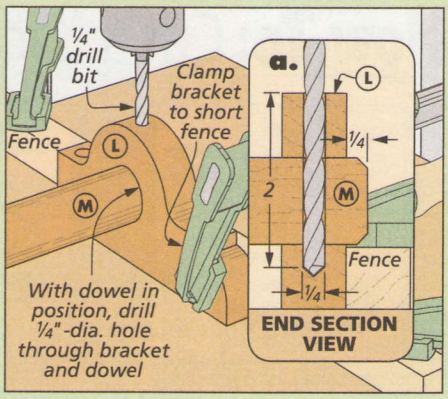

Pin the Dowel. *After drilling a hole through the bracket into the dowel, use a 1/4"-dia. dowel to secure the towel holder.*

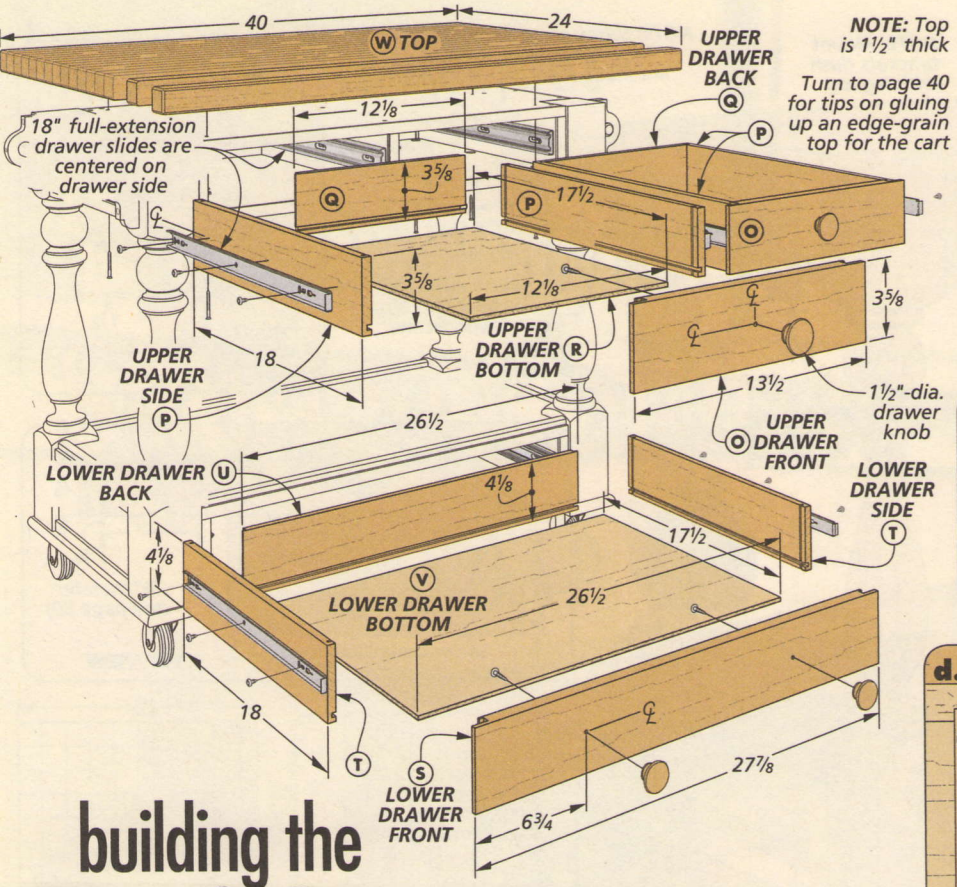

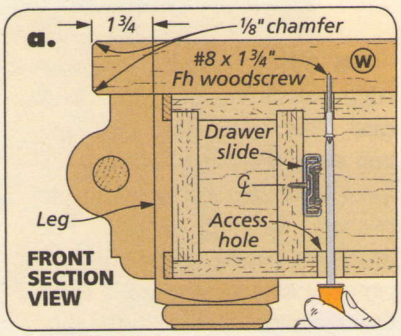

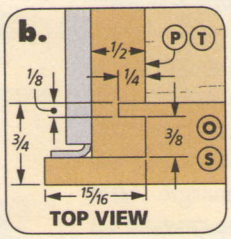

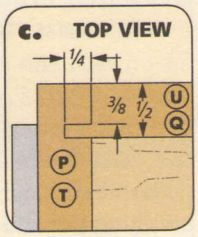

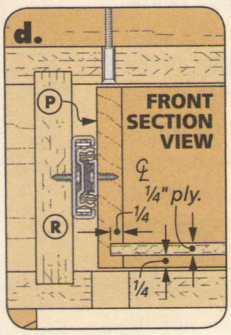

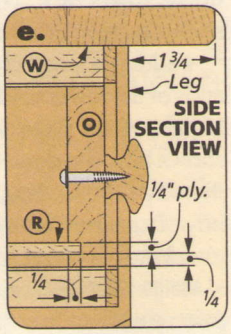

building the TOP & DRAWERS

The kitchen cart wouldn't be complete without a few drawers. After all, you can never have enough storage space. I completed the cart with a glued-up, hardwood top.

DRAWERS. The two drawers in the upper unit are shorter than the bottom drawer, but all three are made using locking rabbet joinery on the fronts and tongue and dado joints for attaching the backs. They also feature wide fronts to conceal the drawers slides. It's a good idea to make them all at the same time.

LOCKING RABBETS. I used ½"-thick maple for the drawer sides and backs, and ¾"-thick cherry for the fronts. After cutting all the parts to final size, you can start on the joinery (details 'b' & 'c'). The box below shows you how to cut the locking rabbet joints for the drawer fronts.

After completing the fronts, you can move on to cut the dadoes in the sides. Once again, use the miter gauge. Attach an auxiliary rip fence to cut the tongues on the drawer backs. Finally, cut a groove near the bottom edge of all the pieces to hold the drawer bottom (detail 'd,' & 'e').

I used ¼" plywood for the drawer bottoms. I simply cut them to final size at the table saw.

Now you can assemble the drawers using glue and a few clamps. After the glue dries, lay out the locations for the drawer knobs and drill the holes. Then install the knobs with screws. Finally, just attach the drawer slides and install the drawers in the case.

THE TOP. The top is glued up from edge-grain strips of maple. You'll find some tips for a successful glue-up procedure in the article on page 40. When you've completed the top, attach it to the case using screws. An oil finish for the top and stain and lacquer for the cart completes the project. W

How-To: Cut a Locking Rabbet Joint

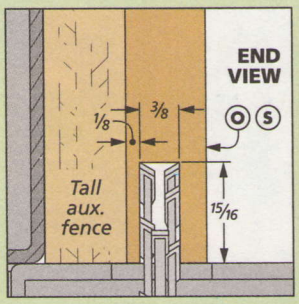

Drawer Fronts. *With the drawer front held vertically, cut the off-center groove.*

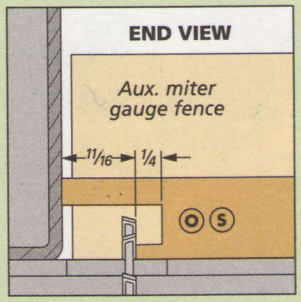

Tongue. *Using an auxiliary fence on the miter gauge, cut the tongue to length.*

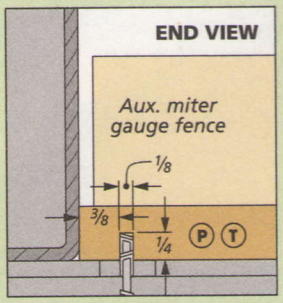

Sides. *Use the rip fence as a stop for cutting the dadoes in the drawer sides.*

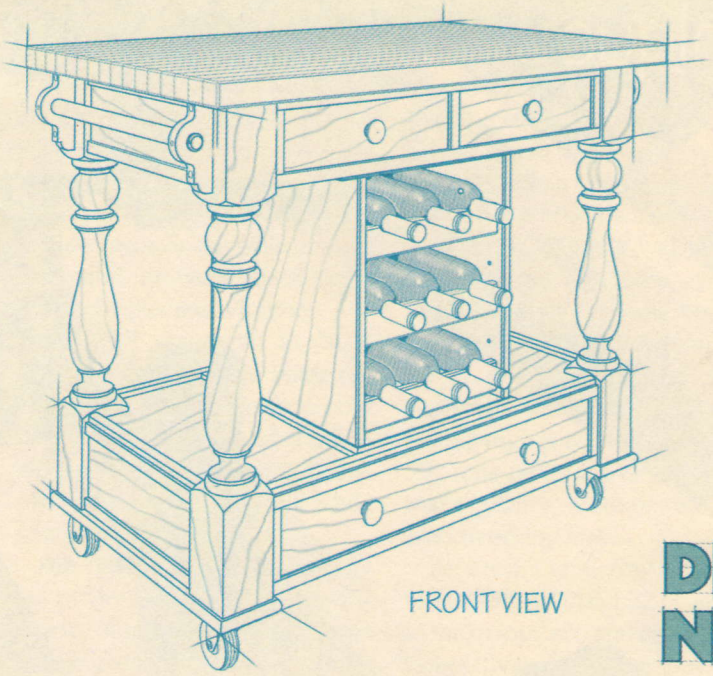

FRONT VIEW

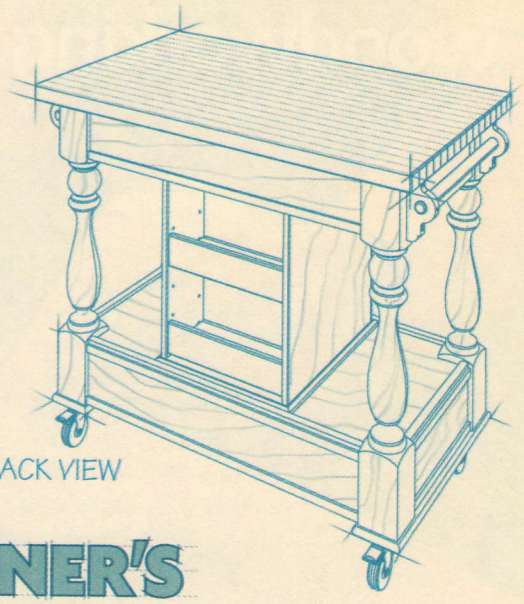

BACK VIEW

DESIGNER'S NOTEBOOK

Woodsmith GO ONLINE EXTRAS

For detailed plans of the optional wine rack, visit our website at Woodsmith.com

One way to take advantage of the space under the top of the cart is to add a handy wine rack. The design shown above also features a couple of extra storage shelves on the back side. If you're interested in building the wine cabinet to add to your cart, you can find the details on our website at Woodsmith.com.

Materials, Supplies & Cutting Diagram

A	Case Tops/Bottoms (4)	3/4 ply. - 19 1/2 x 35 1/2
B	Upper Case Sides/Divider (3)	3/4 ply. - 4 1/4 x 19 1/8
C	Upper Case Ends (2)	3/4 ply. - 4 1/4 x 13 1/2
D	Upper Case Back (1)	3/4 ply. - 4 1/4 x 29 1/2
E	Upper Case Fillers (4)	3/4 ply. - 3 3/4 x 2 3/4
F	Lower Case Sides (2)	3/4 ply. - 4 3/4 x 19 1/8
G	Lower Case Ends (2)	3/4 ply. - 4 3/4 x 13 1/2
H	Lower Case Back (1)	3/4 ply. - 4 3/4 x 29 1/2
I	Lower Case Fillers (4)	3/4 ply. - 4 1/4 x 2 3/4
J	Edging (1)	1/4 x 3/4 - 30 ft. rgh.
K	Edge Stop (1)	5/8 x 3/4 - 96 rgh.
L	Towel Holder Brackets (4)	3/4 x 2 1/2 - 5 1/4
M	Towel Holders (2)	1"-dia. x 18 1/4
N	Caster Mounting Boards (2)	3/4 x 4 1/4 - 21 1/4
O	Upper Drawer Fronts (2)	3/4 x 3 5/8 - 13 1/2
P	Upper Drawer Sides (4)	1/2 x 3 5/8 - 18
Q	Upper Drawer Backs (2)	1/2 x 3 5/8 - 12 1/8
R	Upper Drawer Bottoms (2)	1/4 ply. - 17 1/2 x 12 1/8
S	Lower Drawer Front (1)	3/4 x 4 1/8 - 27 7/8
T	Lower Drawer Sides (2)	1/2 x 4 1/8 - 18
U	Lower Drawer Back (1)	1/2 x 4 1/8 - 26 1/2
V	Lower Drawer Bottom (1)	1/4 ply. - 17 1/2 x 26 1/2
W	Top (1)	1 1/2 x 24 - 40

- (4) 3" Locking Casters
- (3 pr.) 18" Full-Extension Drawer Slides
- (4) 1 1/2"-dia. Drawer Knobs
- (86) #8 x 1 1/4" Fh Woodscrews
- (16) #14 x 3/4" Ph Sheet Metal Screws
- (6) #8 x 1 3/4" Fh Woodscrews
- (1) 1/4"-dia. x 12" Cherry Dowel
- (1) 3/8"-dia. x 12" Cherry Dowel
- (2) 1"-dia. x 36" Maple Dowels
- (4) 3 1/2" x 3 1/2" - 29" Turned Legs

3/4" x 5 1/2" - 72" Cherry (2.8 Bd. Ft.)

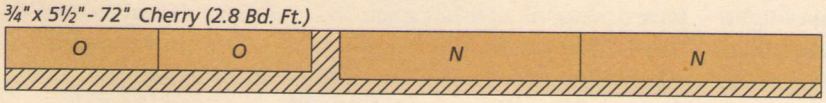

3/4" x 5 1/2" - 48" Cherry (1.8 Bd. Ft.)

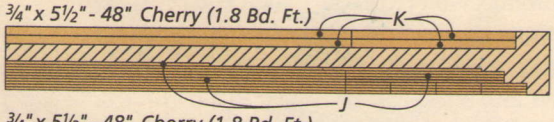

3/4" x 5 1/2" - 48" Cherry (1.8 Bd. Ft.)

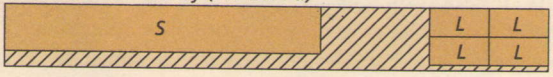

1/2" x 7 1/2" - 48" Hard Maple (2.5 Sq. Ft.)

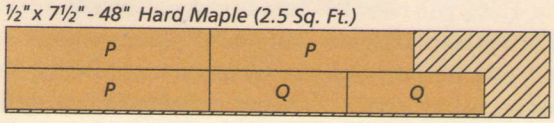

1/2" x 9 1/4" - 48" Hard Maple (3.1 Sq. Ft.)

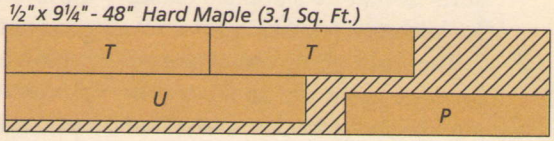

1 3/4" x 7 1/4" - 48" Hard Maple (Four Boards @ 4.8 Bd. Ft. Each)

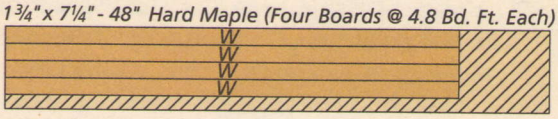

ALSO NEEDED: *One 48" x 96" sheet of 3/4" Cherry plywood*
One 48" x 48" sheet of 1/4" Cherry plywood

making an Edge-Grain Top

Gluing up a wide lamination for a worksurface might seem like a daunting task, but it's just a matter of taking it in stages.

A solid-wood top made from glued-up hardwood strips is both attractive and very functional. It shows off the straight grain and is less prone to cupping or splitting than a single, wide piece, even when it gets wet. So it's no surprise that it's a popular choice for kitchen worksurfaces.

The inset photo above shows an edge-grain top as the worksurface on the kitchen cart. (That project starts on page 32.) This is the perfect application for an edge-grain lamination.

CHALLENGES. But if you've ever struggled to glue up a solid top, chances are you've probably encountered a few problems along the way. For instance, the lumber in my shop seldom stays perfectly flat and straight. Nor does it all have a pleasant, uniform color. So unless I pay careful attention and take steps to solve these problems, the finished product won't look as good as the photo above.

However, if you break the process down into a few simple operations, you'll get predictable results every time. It starts with choosing the right wood and milling it properly. Then, you need to take the time to work out the best color and grain match by arranging the individual workpieces.

Finally, the key to a good assembly is to glue up the top in sections. This not only keeps the size of the individual glueups more manageable, but it also allows you to take advantage of your planer to smooth the face of each section. Then you only have two or three joints to worry about in the final assembly. But it all begins with a trip to the lumberyard.

START WITH THE RIGHT STOCK. There's no doubt that maple is the first choice for a laminated top. It's hard, fairly stable, and has very attractive edge grain. Ash is another option, offering slightly better stability if not as tight a

grain pattern. Of course, you can use these techniques with any wood. In fact, I've made some very nice-looking tops for shop projects using inexpensive, "two-by," construction lumber.

WHAT TO LOOK FOR. No matter what species you choose, there are a few rules of thumb to keep in mind as you pick through the stock to select the individual boards.

First, find flatsawn boards. Ripping them into strips and flipping them on edge will expose the straight, edge-grain pattern. You don't want quartersawn lumber for this kind of assembly.

Straight-grain stock with consistent ring spacing and uniform color will result in the best-looking top. (You can check the end grain of the boards to see how closely the rings are spaced.) I try to avoid boards containing contrasting sapwood and heartwood.

THICKER IS BETTER. I usually choose 1¾"-thick stock for an edge-grain glueup. It not only makes a great-looking top, but it also tends to be a little more stable after you cut it. You can use ¾"-thick stock, of course, but the narrower strips will give a different look to the top (and double the number of strips you'll need to glue up).

PREPARING THE STOCK. Planing the stock before ripping it into strips makes the whole process easier. In most cases, the face of the board will become the glued-up edge joint in the finished product. So getting both faces as flat as possible is a great way to start.

Before you begin, check the knives in your planer. If possible, install a fresh (or recently sharpened) set. This can nearly eliminate further jointing work.

Keep the workpieces extra long while planing (about 6") and cut them to final length later. This makes it possible to cut off snipe. Snipe will result in gaps in the ends of a glued-up section.

Finally, before you begin running boards through the planer, check the grain direction on the edge of each one. The point here is to identify which end to put into the planer so the blades cut "downhill." The photo above and the drawings below show you what I mean. By taking the time to identify the correct feed direction, you can avoid tearout in the planer. And since the planed face will eventually be a joint, this prevents gaps and unsightly voids in the joints on the finished top.

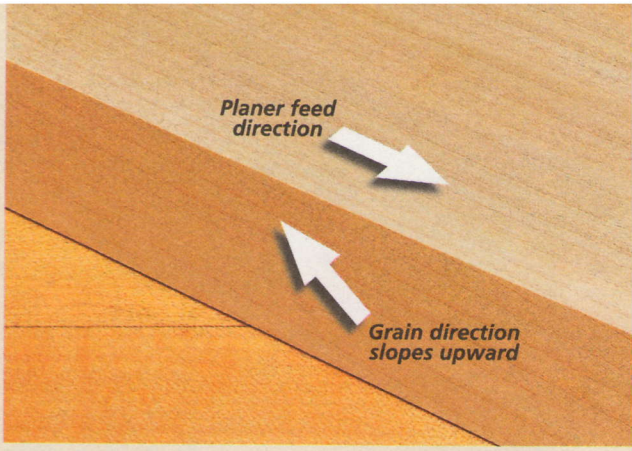

▲ Check the edge of a workpiece to spot the grain direction before planing.

PLANING. Now you can start planing the workpieces. The key here is to take light passes. I plane both faces so each ends up flat and ready for gluing. In order to avoid tearout, you'll need to feed the opposite end of the board into the planer as you flip it over to plane the opposite face.

JOINT ONE EDGE. Now you can prepare the workpieces for ripping. And for that, I move to the jointer. Once again, pay attention to the grain direction as you pass the boards over the jointer (as in the drawing below). When you're done, it's time to head over to the table saw to rip the workpieces.

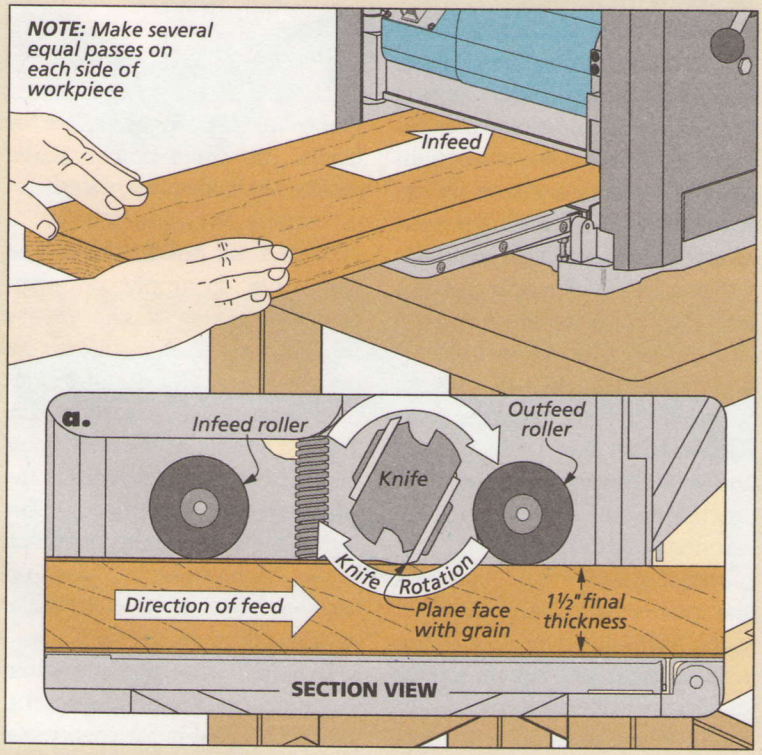

Planing the Faces. *After determining the grain direction on each workpiece, run them through the planer. You'll want to take light cuts and remove just enough stock to flatten both faces.*

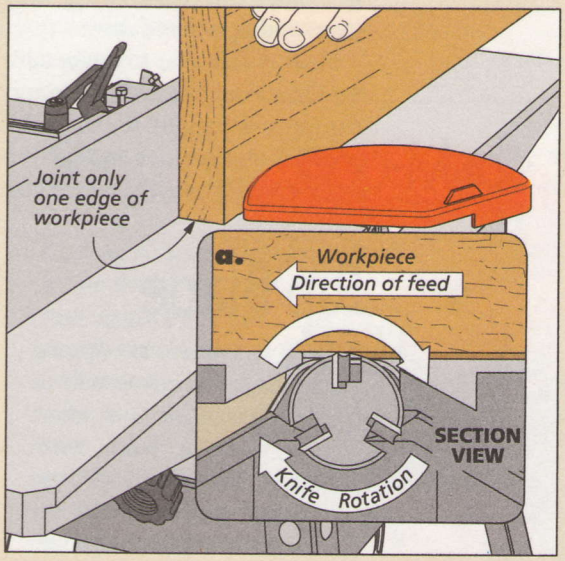

Jointing the Edges. *The jointer provides a perfectly straight, reference edge. Check the grain direction on the face of each workpiece to avoid tearout.*

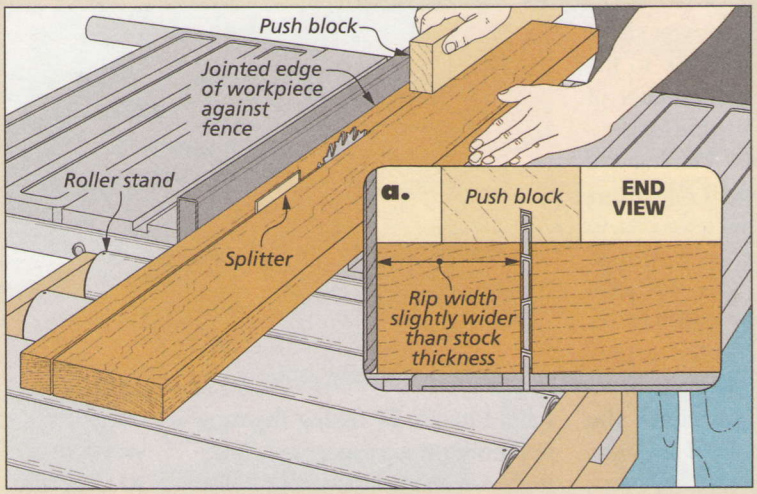

Ripping. *After installing a rip blade and setting up good outfeed support for your table saw, rip the strips extra wide. This allows you to run them through the planer to clean up the saw marks on the edges.*

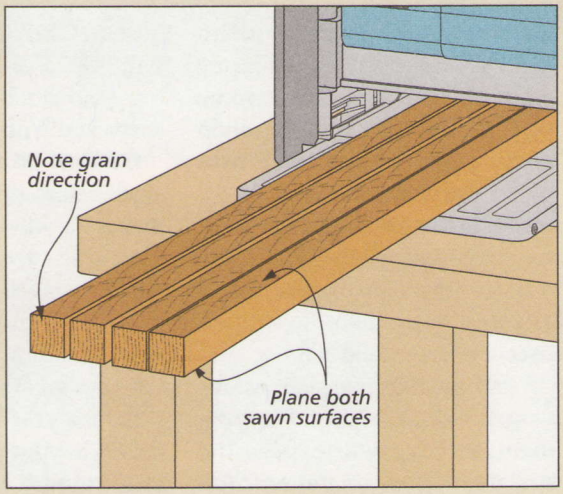

Planing the Strips. *Plane both freshly sawn surfaces to remove all the saw marks. Take shallow cuts with each pass to help prevent tearout.*

RIPPING, PLANING & ASSEMBLING

It may seem like you spent a lot of time selecting and preparing the stock. But by taking the time to do it properly, you've made the rest of the process easier. Now you're ready to start ripping the wide boards and assembling the top.

SET UP THE TABLE SAW. Ripping thick hardwood stock can be a challenge. But there are a couple of things you can do to guarantee safe and smooth sailing.

RIP BLADE. For a quick rip cut in thin stock, a combination blade is fine. But when you set out to rip lots of thick hardwood, you need to install a good rip blade. A thin-kerf blade can also be a big help in an underpowered saw.

Now is the time to make sure the blade is square to the table and the fence is parallel to the blade. It's also a good idea to give the stock a final inspection before you begin ripping the wide blanks. Check to be sure each piece sits flat on the table saw without rocking. Any rocking can cause dangerous kickback.

Another concern is the stock pinching the blade during the cut. To avoid this, make sure the splitter is installed on your saw. Finally, use a push block to feed the stock and a roller stand or table for outfeed support, as shown in the left drawing above.

RIPPING. With your saw tuned up and outfeed support in place, you're ready to start ripping the strips. Two things to keep in mind here are to hold the stock tight against the fence and to maintain a consistent feed rate. The feed rate will be dictated by your saw. Cutting 1¾"-thick maple can be a real test. Feed the stock too fast and the saw bogs down, too slow and the stock burns.

Set the rip fence to cut the strips slightly wider than the thickness of the stock. This way, you can clean up the edges in the planer and finish at the desired thickness.

PLANING. A couple passes through the planer will clean up both faces. Making a final pass on the adjacent faces will square up the blanks and offer you more flexibility when assembling the top. When I've finished planing, I like to let the stock rest for a couple days to allow it to stabilize.

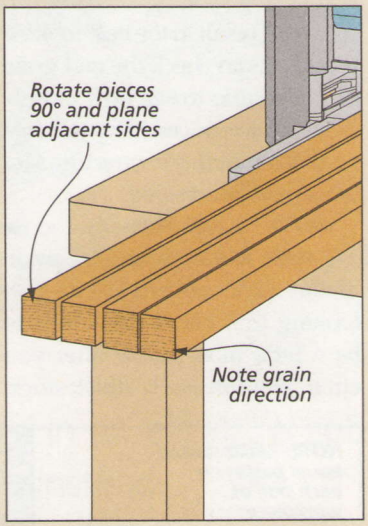

Plane Adjacent Faces. *Rotate the blanks and plane both adjacent surfaces to square the pieces.*

LAYOUT & DRY ASSEMBLY. Now that you have a supply of strips planed and ready to assemble, it's time to put them together for the best look. I like to do the layout on a sheet of MDF on my bench. The flat surface of the MDF helps highlight any imperfections in the surfaces of the workpieces. Now is the time to spot them, not when you're clamping the glued-up sections. You may need to make another pass through the planer.

It helps to be patient when working on the arrangement. While the goal is for each piece to be perfectly square and flat, the wood seldom cooperates. In reality, there will usually be

Rip Blade

When it comes to ripping thick hardwood stock, a good rip blade is a must. You want a blade with about 24-30 teeth so there aren't too many in the stock at a time. Any more can cause burning. And a rip blade's deep gullets keep the chips clear.

some small bows. You can compensate for these by alternating the direction as shown in Figure 1, at right. I worked with four strips at a time. You don't want to have to pull any big gaps together with the clamps. When you've put together a grouping you're happy with, mark the faces (Figure 2).

GLUING UP THE SECTIONS. Turn one edge of each piece face up and apply a bead of glue to one surface of each joint. Use a brush or plastic spreader to even out a thin coat. A "rub joint" technique helps to coat both glue surfaces. (Simply rub the glued surface against the opposite piece until you get an even coat on both.)

It's a good idea to have your clamps laid out and opened to the rough size of the assembly. This way, you can simply put them in place and tighten them up. You can use your favorite bar, pipe, or parallel-jaw clamps (Figure 4).

CLEANING UP. After the glue dries, scrape the squeezeout from both surfaces as shown in Figure 5. A belt sander can also be handy for cleaning up stubborn glue and preparing the sections for the planer. (If you run hardened glue squeezeout through your planer, it can nick the blades.) When you're done, plane both surfaces smooth. Of course, you'll need to plane all the sections to an equal thickness for the final assembly.

FINAL ASSEMBLY. After planing the individual sections, assembling them is a breeze. If any of the sections want to slide out of position, simply use a clamp on the joints to hold them in place.

SANDING & FINISHING. The final appearance of the top depends on a good sanding job. You need to be careful not to sand dips or depressions into the surface. One way to avoid this is to use plenty of pencil marks and a straightedge to gauge your progress.

Now just square up the ends using a circular saw or crosscut sled on the table saw. Add an oil finish and you have the perfect kitchen worksurface. W

How-To: Glue Up the Top

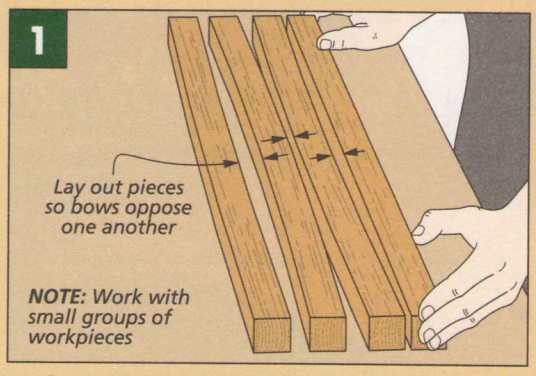

Color and Grain Matching. *Lay out the pieces for the best appearance. If the stock is bowed, arrange the bowed faces opposite each other.*

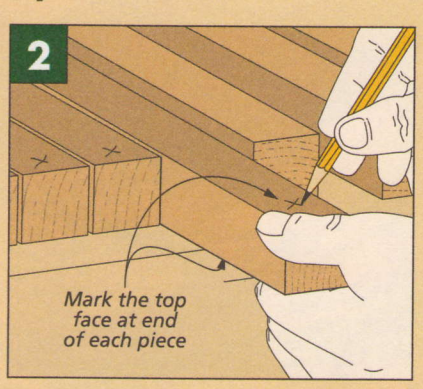

Marking. *When you have the best arrangement for each group, mark the top face of each piece.*

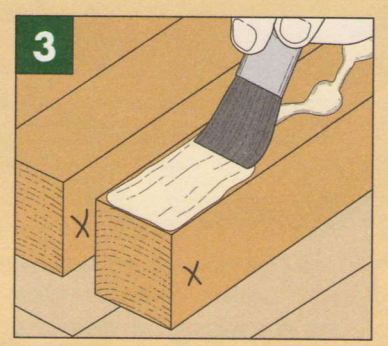

Applying Glue. *Use a small brush to spread an even coat of glue on one face of each joint.*

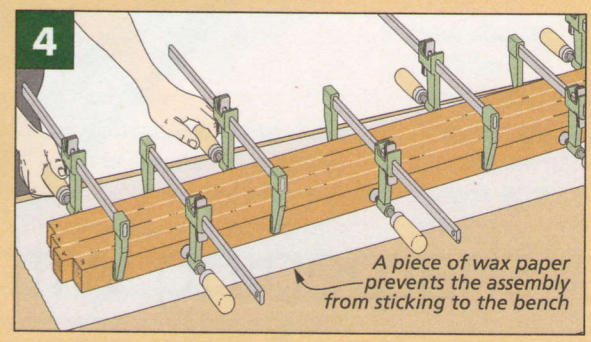

Glue Up the Sections. *By working in narrow sections, you have plenty of time to keep each joint flat. This helps minimize planing later.*

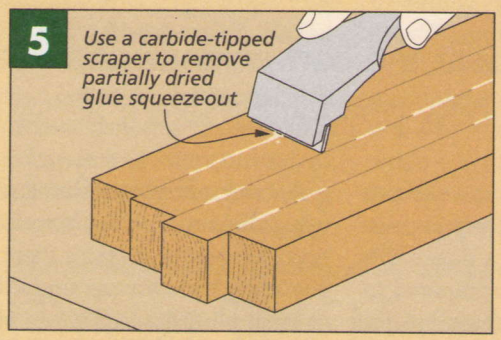

Scrape the Squeezeout. *Use a scraper to remove the beads of partially dried glue from both surfaces of each section.*

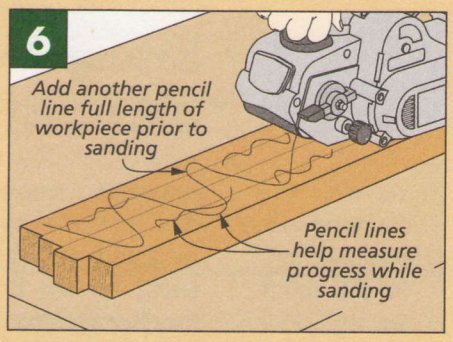

Sanding. *If a section slipped in the clamps or otherwise doesn't come out flat, a belt sander can help flatten one face.*

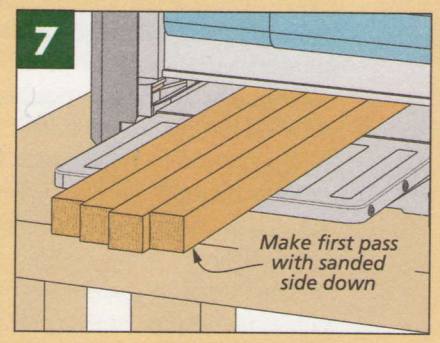

Planing. *Once the glue is removed, run each section through the planer until they're all the same thickness.*

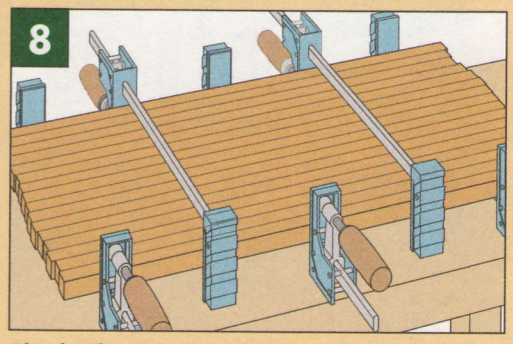

Final Glueup. *At this point, you only have three joint lines to worry about as you assemble all the narrower sections.*

sharpening with Diamond Plates

It's tough to beat the convenience of sharpening with diamonds, and a couple new products make it almost irresistable.

You can find a diamond sharpening option for just about any situation.

Ask a dozen woodworkers what's the "best" way to sharpen edge tools and you'll get a dozen different answers. But compared to the other options, diamond plates offer some advantages.

WHY DIAMONDS? First, diamonds sharpen steel faster than other abrasives. This is due to the hardness of the diamond crystal.

Another advantage is the ease of using diamond plates. You don't need to soak or prepare them in any way. You can use them dry or with a lubricant. There's also very little maintenance required. There's no need to worry about flattening a diamond plate like you would a waterstone or oilstone. The plates stay perfectly flat during normal use. In fact, they're ideal for flattening your other types of abrasive stones.

Finally, it's the only sharpening medium available to the home woodworker that's hard enough to sharpen carbide. This makes diamonds the go-to tool for touching up router bits (photo in upper right corner of opposite page).

HOW THEY'RE MADE. Most waterstones and oilstones are solid blocks of abrasive. But diamond plates are made by bonding a thin layer of diamond particles to a steel plate, as shown in the photos at left.

The two main manufacturers of diamond plates — *DMT* and *EZE-Lap* — each offer an assortment of plate sizes in a range of "grits." (See page 51 for sources.)

TECHNIQUES. You can use your favorite sharpening jig on the diamond plates just like you would any other sharpening stone. The thing to remember is to keep the pressure light. Diamonds cut very aggressively, so a few minutes work on a stone is done in a few seconds on a diamond plate. You might want to blacken the edge of your tool with a marker before you start. This helps keep track of your progress as you sharpen.

DRY OR WET. You can use the plates dry, but I find the best results come by using water and a drop of dishwashing liquid to lubricate the plate. When you're done, simply clean off the plate with a brush and dry it with a paper towel. This is to prevent the metal particles from rusting.

One odd thing about diamond plates is that it takes a little use to break them in. Don't be surprised if a new plate leaves more scratches than you expect. After continued use, the sharpest points will wear down and the finish will gradually look more even.

WHAT'S NEW? Although diamond plates from *DMT* and *EZE-Lap* have been available for several years, until recently they've suffered from one shortcoming. You could only sharpen to the equivalent of 1200 grit with diamonds.

Slide the gouge on the surface to find the correct diameter.

DMT's aptly named *Wave* excels at sharpening the curved edge on most gouges.

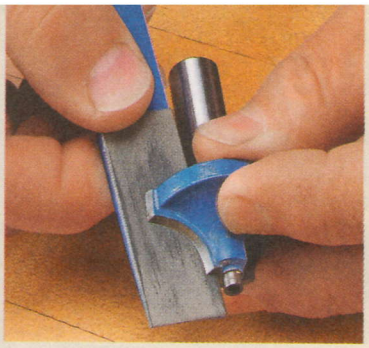

Diamond paddles are useful for touching up carbide-tipped router bits.

While that might be acceptable for some tools, if you're looking for a super-sharp edge for your chisels or plane irons, it's not quite enough. I always needed to finish by honing the bevel on a waterstone.

DMT's addition of an extra-extra fine plate makes it possible to assemble a complete diamond sharpening system. This 3-micron grit plate hones like an 8000-grit waterstone for a razor's edge. The box below helps compare this and other sharpening media.

CATCH THE WAVE. Sharpening carving gouges presents a special challenge. Another new product from *DMT*, known as the *Wave* (photo at left) offers a simple, but innovative solution. The *Wave* is simply a thin steel plate rolled to form both convex and concave surfaces. The diamonds in the surface allow you to find the right diameter for sharpening any gouge.

Once you give diamond sharpening a try, chances are you'll find a place for a few of these handy tools in your shop. W

A micro-bevel honed on the extra-extra fine plate rivals an edge honed on a waterstone.

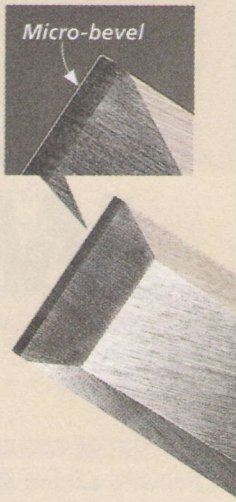

Grading the Grit: Apples & Oranges?

Comparing "grit" between different types of sharpening media can be difficult. Some comparisons are at best, approximations. And the designation of "coarse" and "fine" can mean completely different things in different systems.

Rather than rely solely on these labels, it's helpful to look at the size of the particles in each abrading medium, measured in microns (one millionth of a meter). This chart gives you a better idea of how the different sizes compare.

Abrasive Particle Sizes

Sandpaper	Waterstone	Oilstone	DMT Diamond	Micron
P100	220	Coarse India	Extra-extra Coarse	125
P150				100
P220		Medium India	Extra Coarse	68
P320		Washita	Coarse	46
P600			Fine	25
P1000	1000	Soft Arkansas		18
P1500				13
P2000	6000	Hard Arkansas	Extra Fine	10
	8000		Extra-extra Fine	3

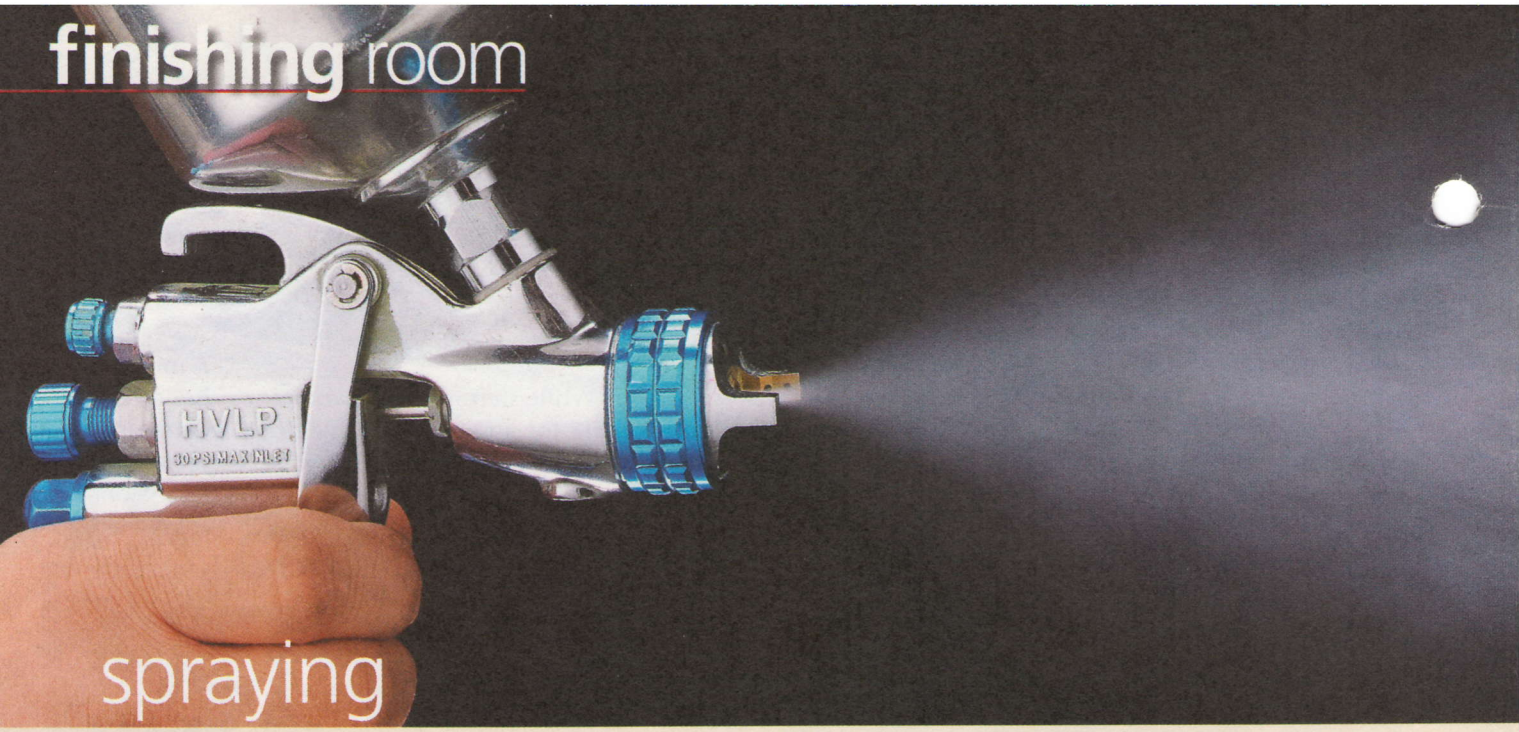

spraying

Water-Based Finish

This unbeatable finishing combination guarantees top-notch results with an absolute minimum of time and effort.

Spraying is a very efficient way to apply a finish. You can complete the job in a fraction of the time needed with other methods and the quality is usually hard to beat. The obvious drawbacks are the equipment expense and the need for a suitable space for spraying volatile finishes. Not many of us have a dedicated spray booth. However with the introduction of lower-cost HVLP (High Volume Low Pressure) spraying systems and user-friendly water-based finishes, spray finishing is now much more accessible.

THE RIGHT COMBINATION. HVLP systems are designed to minimize the amount of finish dispersed into the air as overspray and bounceback. Due to the lower air pressure needed, most of the finish lands on the surface of your project and stays put. Combine this with the fact that water-based finishes are nearly odorless, non-flammable, dry quickly, and are less toxic, and you have a very desirable combination for use in small-shop finishing.

THE EQUIPMENT. There are two types of HVLP systems (photos at left). An integrated system uses a turbine to provide a large volume of air at low pressure (about 10 lbs.). You use a large-diameter air hose and a gun compatible with the HVLP turbine.

A second option is to use an HVLP conversion gun along with a standard air compressor. This type works at a slightly higher pressure — 25 to 30 lbs., but you'll get equally good results. A conversion gun looks much like a standard, gravity feed spray gun with the same controls. If you already own an air compressor, this is a good way to go.

BASIC SAFETY. Although water-based finishes are fairly benign, you'll still want to take some basic precautions. Your spray area should be well ventilated and free from dust. And then always wear a respirator.

STIR, STRAIN, & THIN. The photos across the top of the next page show how to prepare the finish for spraying. Start by stirring it to an even consistency. Next comes straining. This will prevent small clumps of finish from clogging the gun or spoiling the film.

Finally, I like to thin my finish slightly. Water-based finishes have a high solid content and are relatively thick compared to other finishes. So to get better atomization, it helps to add a little water.

This HVLP turbine system has everything you need in a portable package.

If you already own an air compressor, a good option is an HVLP conversion gun.

Most water-based finishes can be thinned up to 20% without affecting the curing characteristics.

RAISED GRAIN? Water-based finish will raise the grain of the wood. There are several strategies for dealing with this problem. One is to pre-raise the grain by dampening the wood. Then you can sand it smooth prior to finishing.

A different tack is to use a sealer such as shellac. I like this approach because it has the added advantage of imparting a pleasant color to the wood. Finally, you can simply allow the first coat of finish to act as a sanding sealer. Spray on a light coat, let it raise the grain, then sand it smooth.

SPRAY TECHNIQUE

Now you're about ready to start spraying your project. I'll just offer a few basic tips to help get you off on the right foot.

ADJUSTMENTS. First, you need to adjust the spray pattern. A gun will spray a "fan" perpendicular to the fins on the air cap. The cap can be rotated to any angle depending on the orientation of the surface being sprayed.

▲ Preparing the finish for spraying is a simple, three-step process.

The upper drawing below, shows the ideal fan pattern for most surfaces — an oval shape with a length that matches the optimum spraying distance of 6" to 8". A longer spray pattern will produce coverage that's too light, a condensed pattern too heavy. You can test the spray pattern on a piece cardboard.

LIGHT COATS. You'll get better results with several thin coats rather than one thick coat. You want to spray on a wet coat, but not one that looks thick and puddled. You shouldn't see a milky opaqueness to the film. Too little finish will leave a surface that appears dull and rough.

Don't worry if the wet film develops a slight "orange peel" texture. It will disappear as the finish dries.

HORIZONTAL. When spraying a horizontal surface, start at the far edge and work back toward yourself. Use back and forth passes, overlapping each stroke about ⅓ of the fan width. For consistent coverage, always keep the gun perpendicular to the surface, as shown below. As I mentioned, the tip should be about 6" to 8" from the surface. Start spraying beyond the edge and move slowly and steadily across the surface, releasing the trigger only when you've passed over the opposite edge.

▲ You should always wear a respirator when spraying any type of finish.

VERTICAL. Water-based finishes have a tendency to run on vertical surfaces. The solution is to spray lighter coats. You do this by moving the gun at a faster pace.

FINAL TIPS. I like to spray from the inside out. Inside surfaces are easier to access before the exposed areas are sprayed. And if needed, the project can be tipped or turned to get at hard-to-reach spots. When spraying in tight areas, trigger on and off quickly and try to keep the gun moving.

Spray along narrow surfaces like table and chair legs, not across them (lower left drawing). Square edges can be sprayed diagonally along their length so that both adjacent edges are coated simultaneously. This helps prevent thick buildup of finish along the edge.

Once you're accustomed to spraying water-based finish, you might not want to go back to your past finishing ways. The ease, speed, and quality make it an awfully appealing option. W

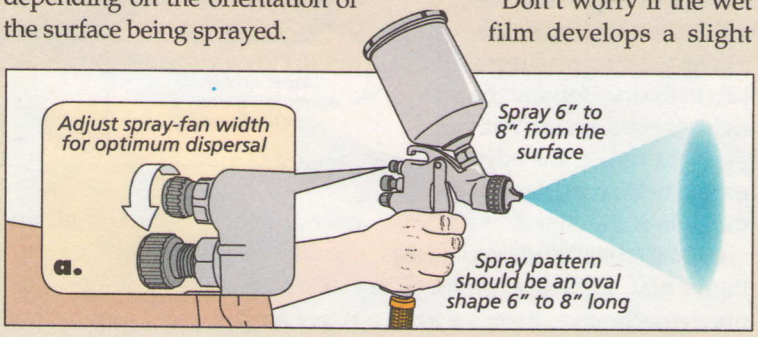

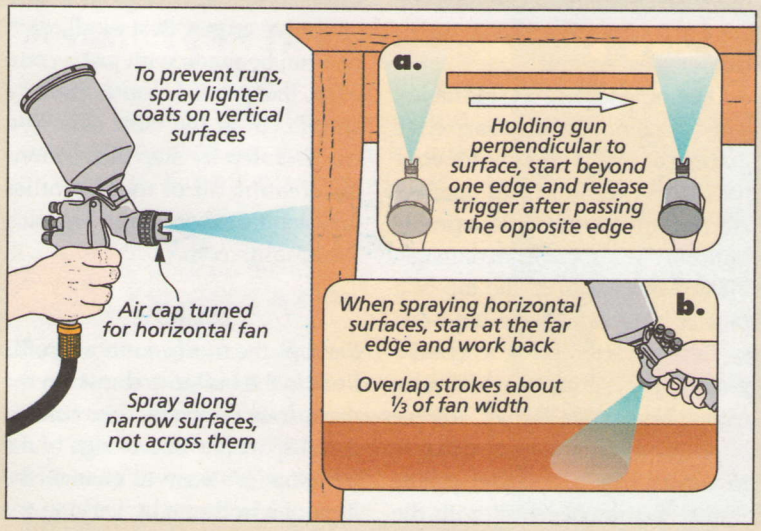

selecting Table Edge Profiles

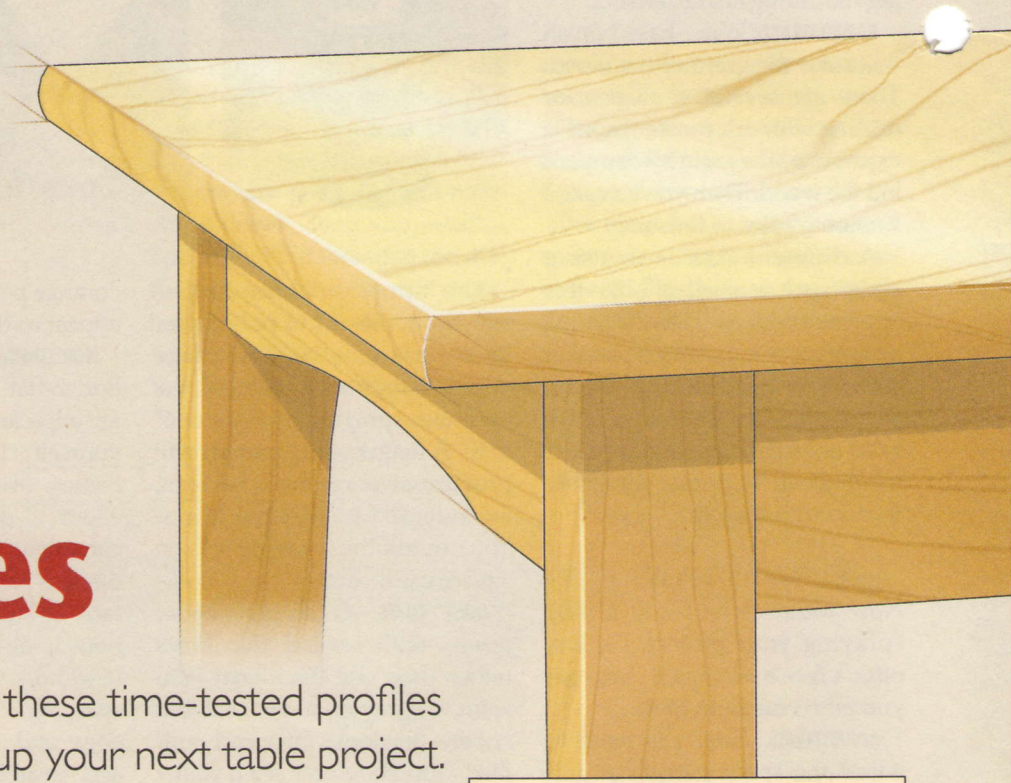

Try one of these time-tested profiles to dress up your next table project.

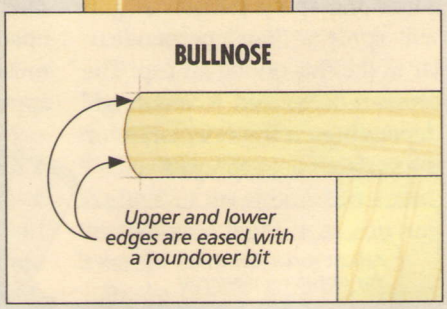

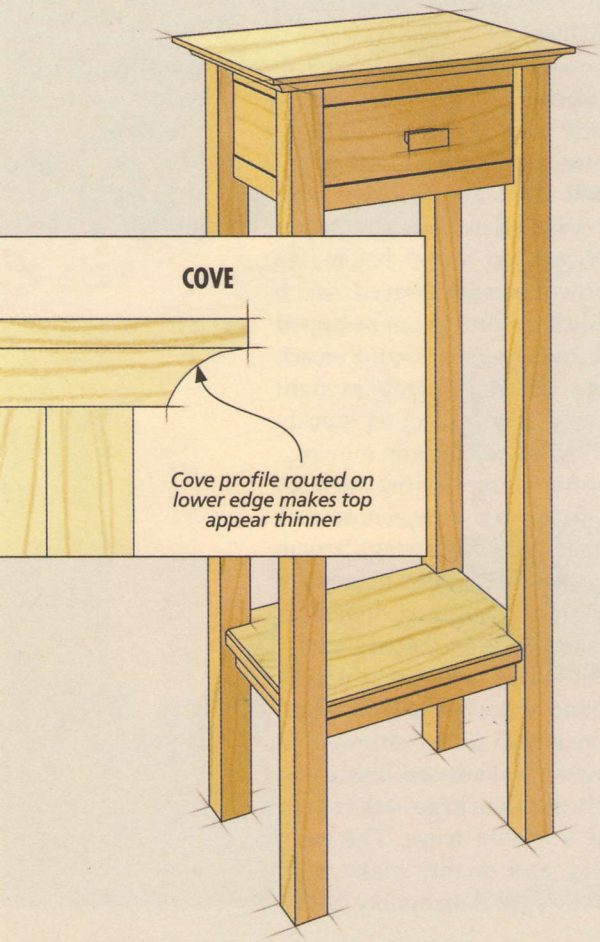

One of the first things people notice about a table is the top. So besides selecting the best-looking wood, a great way to draw attention to the top is to add the right edge treatment. With the right choice, the edge profile helps complement the style of the table.

COMFORT FACTOR. While you might think that an edge profile is purely decorative, there's a little more to it than that. Softening the edge of a tabletop serves a practical purpose, as well.

On dining tables and side tables, a profile eliminates the sharp edge that can be uncomfortable for your hands and arms to rub against. And for any type of table, a profile protects the corners from damage.

SIMPLE PROFILES. Since the top of a project is so prominent (and can be large), it's tempting to choose a complex profile created by an expensive "table edge" router bit. But usually, a better option is to select a smaller, simpler profile — one that blends well with the overall design instead of attracting too much attention.

The five profiles shown on these pages are the ones I turn to most often to create comfortable and attractive edges. Best of all, each one can be made with just a common, inexpensive router bit or a simple cut at the table saw. You can find step-by-step instructions for creating all of these profiles and several others at our website, Woodsmith.com.

BULLNOSE

Perhaps the most common profile I use is the bullnose shown in the main drawing above. This rounded detail spans the entire edge of the tabletop. It's easy to change the look of a bullnose by varying the

curve from a gentle radius on the edge to a complete half circle. And all it takes is a roundover bit.

Versatility is the main reason I like this profile. It looks just as good on traditional projects as it does on contemporary pieces. In the example shown here, the table has a lot of straight lines, so the subtle curve provided by the bullnose offers a good contrast without being a distraction.

COVE

Normally, you think of creating a profile on the upper edge of a tabletop where it will be most visible. So the cove profile shown on the accent table on the opposite page may seem out of place. Here, the main job of the cove is to create a particular visual effect.

Routing a profile on the lower edge with a cove bit makes the top appear thinner when viewed from above. And it helps draw your eye along the narrow frame of the table. The simple, crisp curve works well on this Asian-inspired, contemporary table.

THUMBNAIL

Sometimes the form and function of a table edge profile work together. The drop-leaf table shown at upper right is a good example. The outer edge of the table features a classic variation of a roundover called a thumbnail profile. It's at home on traditional as well as country-style projects. The rounded portion of the profile softens the edge, while the short shoulder creates a shadow line to add extra interest.

A thumbnail profile also serves double duty by forming one half of a rule joint. The thumbnail is routed on the straight edges of the main section of the top. The opposite profile (a cove) is routed on the mating edges of the folding leaves. The result is a practical and attractive connection between the moving parts of the top.

BEVEL

An edge profile often helps define the style of a project. And this is the case with the wide bevel profile used on the Craftsman-style sofa table below. Wide chamfers and bevels are hallmarks of this style of furniture. Here again, the profile is shaped on the lower edge. The bevel complements the taper cut at the bottom of the thick legs to help make the table appear lighter. A wide bevel profile like this can be shaped at the table saw.

OGEE

An ornate, traditional project, such as the example shown at the lower right, calls for an edge profile with the same degree of detail. The timeless ogee profile serves this purpose well. It can be used in combination with applied moldings to create a complex, built-up appearance. However, the simple shape lends itself for use with many styles.

If you keep these ideas in mind, the result is sure to be a top that's attractive and complements the style of the piece. W

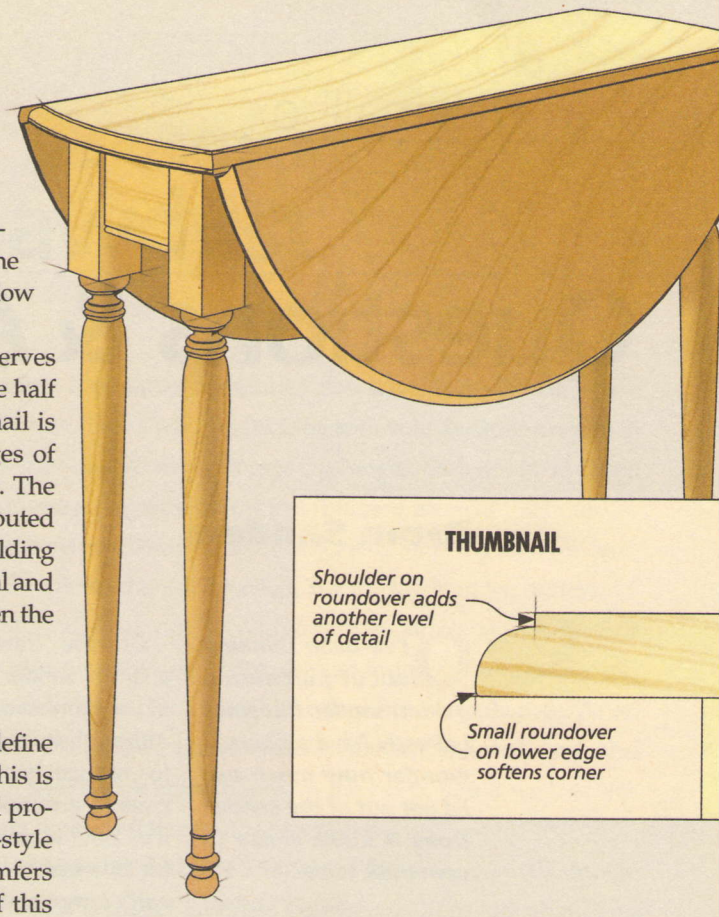

Woodsmith GO ONLINE EXTRAS

To download a detailed article on how to create edge profiles, visit our website at Woodsmith.com

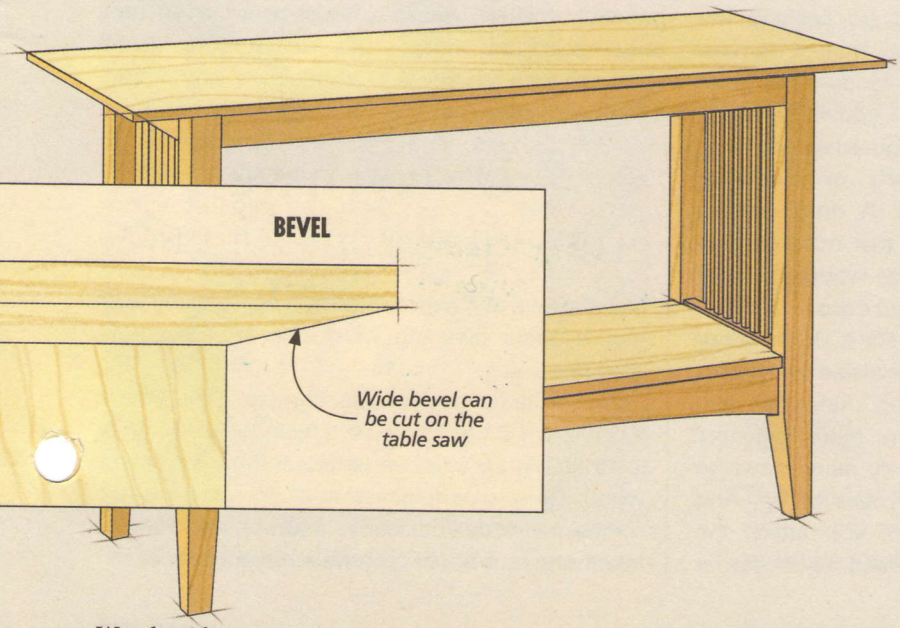

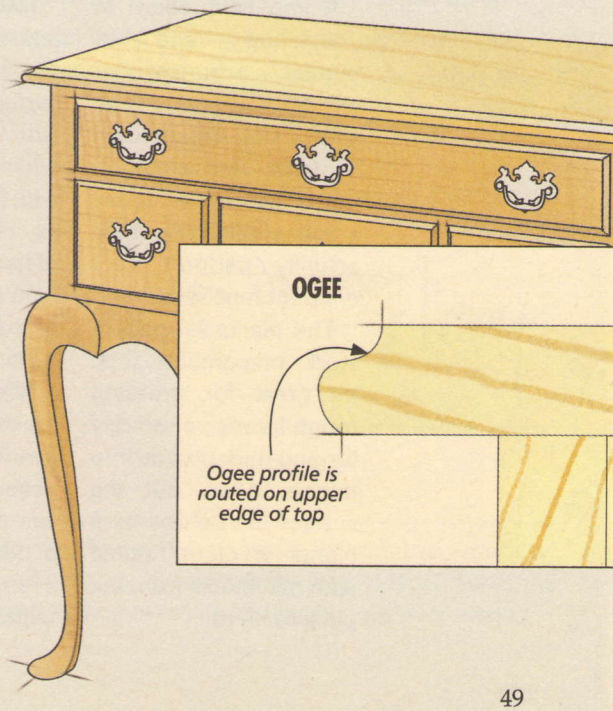

Questions & Answers

Drum Sanders

Q ***I've been thinking about purchasing a drum sander, but since I already have a planer, I wonder how much use I'd get out of the sander. Does it make sense to own both tools?***

Randy Caswell
Bloomington, Indiana

A Years ago, you'd typically find drum (or thickness) sanders only in large, commercial shops. But with the advent of smaller, more affordable models, the drum sander has become a more common tool in home shops as well.

If you have room in your shop — and your budget — a drum sander can be a valuable tool, even if you already own a planer. And although these two tools share some similarities, they actually perform very different functions.

The planer is really a stock preparation tool. It's great for dressing rough lumber, or quickly turning thick boards into thinner ones. But the surface left behind by a planer is often rippled with mill marks from the planer knives.

On the other hand, a drum sander is more of a "finishing" tool. Although it can be used to reduce stock thickness to a minor degree, it's not ideally suited for this task — it simply can't remove material as quickly as a planer.

However, a drum sander will leave a smooth surface that requires minimal hand sanding before applying a finish. That's why I'll often run my workpieces through a drum sander after planing them to thickness, simply to remove the mill marks.

FIGURED WOOD. But the advantages of a drum sander go beyond the surface that it leaves. Drum sanders are great when you're working with figured woods, such as curly or bird's-eye maple. A drum sander won't tear out the grain of these woods the way a planer does.

THIN STOCK. Drum sanders are also excellent for sanding thin stock and veneers. Most planers can only plane down to a thickness of 1/8". And even if you attach the workpiece to a carrier board, the striking action of the planer knives can cause the workpiece to crack or break. But drum sanders can easily handle material as thin as 1/32" and as short as 3".

▲ The open-end design of some drum sanders allows you to sand wide panels by turning the workpiece around between passes.

LARGE PANELS. Although the construction of drum sanders varies between makers, most units made for home shop use have an open-end design (see photo). This allows you to sand large, glued-up panels that are nearly twice as wide as the sanding drum by simply turning the panel around and making another pass.

Although I wouldn't go so far as to classify the drum sander as a "must-have" shop tool, it's definitely a useful addition to any woodworking shop. W

Do you have any questions for us?

If you have a question related to woodworking techniques, tools, finishing, hardware, or accessories, we'd like to hear from you.

Just write down your question and mail it to us: Woodsmith Q&A, 2200 Grand Avenue, Des Moines, Iowa 50312. Or you can email us the question at: woodsmith@woodsmith.com.

Please include your name, address, and daytime telephone number in case we have questions.

Sources

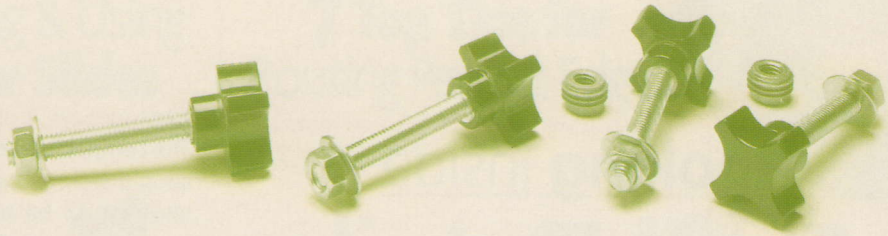

DRAWER SLIDES

Metal drawer slides, like those shown on page 8, are available at most hardware stores and home centers. The spacers and rear mounting brackets came from *Lee Valley* and *Rockler*.

BENCH GRIPPERS

When it comes to bench grippers, you have a number of choices. *Rockler* sells the original *Bench Cookies* and *Bench Cookies Plus*, as well as the risers, storage rack, and cones.

The *Wolf Paw* grippers are available from *Woodworker's Supply* and the *Loc-Blocks* are sold through *Peachtree Woodworking*. Contact information for these companies is listed in the margin at right.

DIGITAL ANGLE GAUGES

A digital angle gauge is a simple way to increase the accuracy of your woodworking. The gauges shown in the article on page 12 are available from a number of the sources shown at right.

STORAGE CABINET

The hardware used to build the cottage storage cabinet on page 16 came from *Rockler*. This includes the knobs (26244), shelf pins (22773), magnetic catches (26559), and no-mortise hinges (49393). The bun feet (303-BF.SM) are from *Classic Designs by Matthew Burak*. The paint used on the cabinet is *Benjamin Moore's "Monroe Bisque."*

CRAFT CENTER

The craft center on page 22 requires quite a few hardware items. The threaded inserts (00N11.13), connector bolts (00N16.30), hinges (00B15.24), door stops (00B17.34) and drawer slides (02K42.10) all came from *Lee Valley*. The knobs used on the doors and drawers are from *Reid Supply* (ESP-285).

The painted portions of the craft center were painted with *Benjamin Moore's "Raspberry Truffle."* The unpainted parts were simply finished with a couple coats of lacquer.

KITCHEN WORKSTATION

In addition to some screws and washers, there are a few other items you'll need to build the kitchen workstation on page 32. The turned legs (505-29T.CH) were purchased from *Classic Designs by Matthew Burak*. The knobs (02G11.21) and drawer slides (02K42.18) came from *Lee Valley*. And we turned to *Rockler* for the casters (35377).

The cherry portions of the cart were stained with a mix of three parts *Zar* cherry stain and one part *WoodKote Jel'd Stain* (cherry). After spraying on a coat of lacquer, we applied a coat of *General Finishes' Gel Stain* (*Java*) as a glaze. Then the whole project was given a couple more coats of lacquer.

DIAMOND PLATES

Long-lasting diamond plates are a practical option compared to other sharpening methods. They're available from several of the sources listed at right. W

Online Customer Service

Click on *Magazine Customer Service* at **Woodsmith.com**

- Access your account status
- Change your mailing or email address
- Pay your bill
- Renew your subscription
- Tell us if you've missed an issue
- Find out if your payment has been received

MAIL ORDER SOURCES

Project supplies may be ordered from the following companies:

Woodsmith Store
800-444-7527
Bench Cookies, Drawer Slides, Storage Cabinet Hardware, Wixey Gauges

Rockler
800-279-4441
rockler.com
Bench Cookies, Casters, Drawer Slides, Storage Cabinet Hardware, Wixey Gauges

Amazon
amazon.com
Digital Angle Gauges, DMT Diamond Plates, Drawer Slides

Classic Designs by Matthew Burak
800-748-3480
tablelegs.com
Bun Feet, Turned Legs

EZE-Lap
800-843-4815
eze-lap.com
EZE-Lap Diamond Plates

Lee Valley
800-871-8158
leevalley.com
Craft Center Hardware, Drawer Slides

Peachtree Woodworking
888-512-9069
ptreeusa.com
Loc-Blocks

Reid Supply
800-253-0421
reidsupply.com
Craft Center Knobs

Woodcraft
800-225-1153
woodcraft.com
DMT Diamond Plates, Wixey Gauges

Woodworker's Supply
800-645-9292
woodworker.com
Wolf Bench Paws

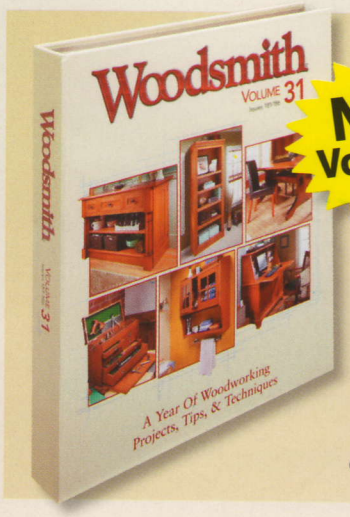

NEW! Volume 31

Woodsmith®

- Sturdy, spiral-bound hardcover
- Six complete issues with reference index
- An entire year of project plans, tips and techniques for your shop — all at your fingertips

Item #WV31 *Woodsmith* **Hardbound Volume 31** $29.95

Go to Woodsmith.com
or Call 1-800-444-7527 Today to Order Yours!

looking inside
Final Details

► *Cottage-Style Cabinet.* The compact size of this simple storage cabinet allows it to be tucked away in a corner. But it's attractive enough that you may want it front and center. Complete plans begin on page 16.

◄ *Craft Center.* The large top on this craft table offers plenty of room for you to spread out your work. And you're sure to appreciate the storage "cubbies" at each end. You'll find step-by-step plans on page 22.

► *Kitchen Workstation.* When it's not being used for food preparation, this handsome cart can double as a serving buffet. An optional wine rack adds to the versatility of this project. Take a look at the plans starting on page 32.